Mecanil Products

MECANIL SG280

Spare parts & Technical information

GENERATION 2

All rights reserved. Specifications are subject to alteration.
Mecanil Oy Ab can not be held responsible for possible type errors or inconsistencies in this spare parts list.

01/2025

Part numbers in this book are links. Select one to open that part in the Grapplesawtrucks.com parts store.

© 2024 Mecanil Oy Ab

Serial number: _____

Information and parts specific for this product:

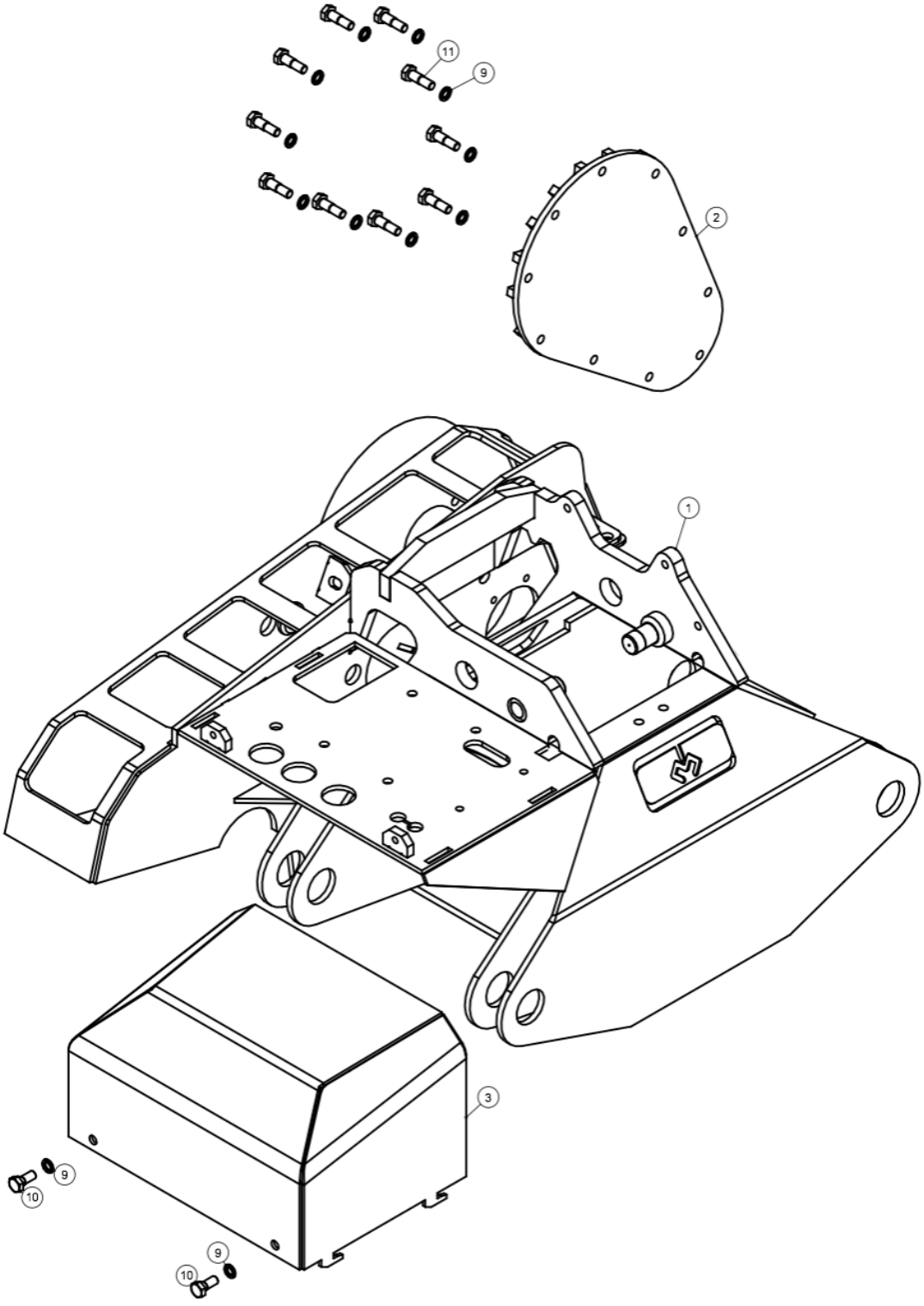
11
9
2
1
3
9
10
9
10

No.	Art. No.	Part	Description	Quantity (pcs.)
1	201-220150	Grapple frame		1
2	201-220502	Lid drive belt		1
3	201-220140	Lid valve set		1
9	510-220377	Washer	M10	12
10	510-220259	Bolt	M10x20 8.8ZN	2
11	510-220260	Bolt	M10x35 8.8	10

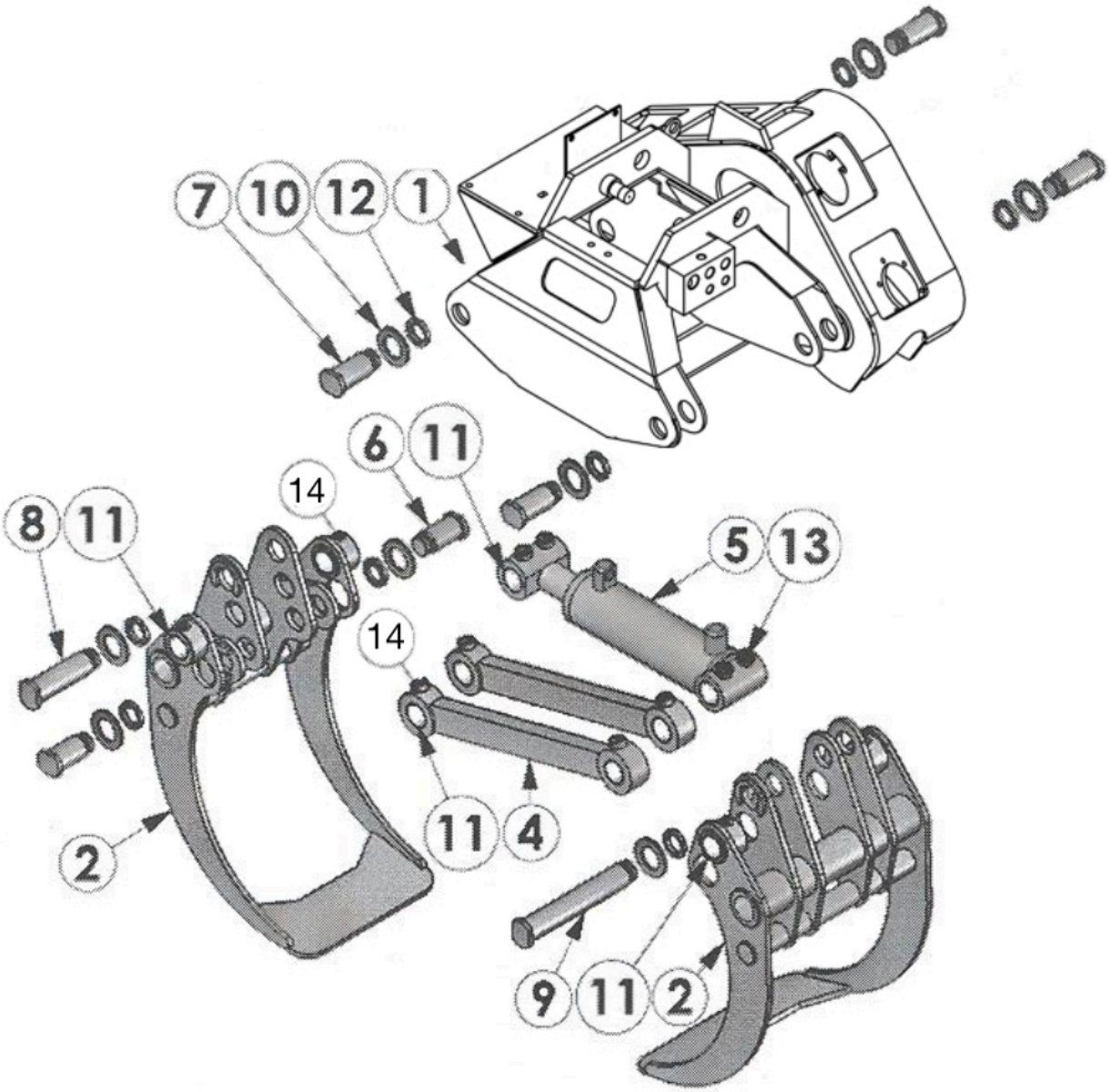
7
10
12
1
6
11
14
8
11
5
13
14
11
4
2
9
11
2

No.	Art. No.	Part	Description	Quantity (pcs.)
1	201-220150	Grapple frame		1
2	201-220108	Log grapple claws (pair)	Claw alt. 1	1
2	201-220109	Energy grapple claws, open ended (pair)	Claw alt. 2	1
2	201-220105	A-model claws, with diagonal plates (pair)	Claw alt. 3	1
4	201-220142	Guide bar		2
5	401-220129	Grapple cylinder		1
	402-220319	Seal kit grapple cylinder		1
6	201-220039	Shaft, guide bar		2
7	201-220038	Shaft, grapple claw		4
8	201-220040	Shaft, grapple cylinder shaft		1
9	201-220041	Shaft, grapple cylinder, guide bar		1
10	510-220287	Washer		8
11	404-220288	Bushing 5040		12
12	510-220274	Nut KM9	KM9	8
13	510-220228	Grease fitting	M6 straight	2
14	510-220230	Grease fitting	M10x1 straight	8

© 2024 Mecanil Oy Ab

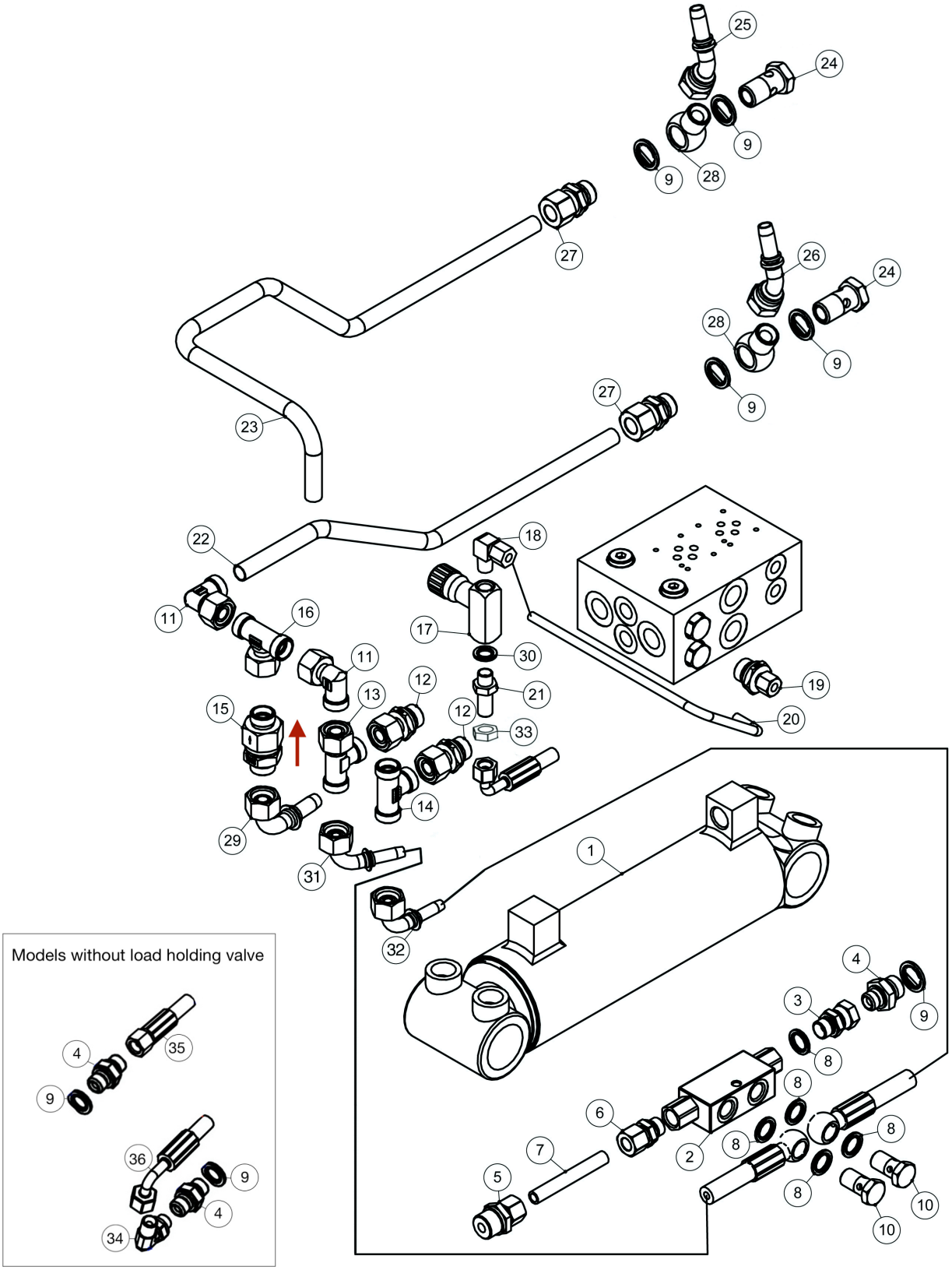
25
24
9
9
28
27
26
24
28
9
9
27
23
22
18
11
16
17
30
11
12
13
19
21
15
12
33
20
14
29
31
1
32
4
3
9
8
8
6
8
2
8
7
8
5
8
10
10
Models without load holding valve
4
35
9
36
9
4
34

No.	Art. No.	Part	Description	Quantity (pcs.)
1	401-220129	Grapple cylinder		1
1	401-220129KIT	Including 401-220129 & 400-220948K	For models with load holding valve	
2	400-220222	Load holding valve		1
3	400-220197	Fitting	BSP outer/inner thread	1
4	400-220168	Fitting	Double fitting BSP	1-2
5	400-220443K	Pipe fitting	1/2” 12,5 mm	1
6	400-220204K	Pipe fitting	3/8”	1
7	400-220948	Hydraulic pipe		1
	400-220948K	Including parts nr 5, 6 & 7		
8	400-220178	Self-centering metal seal	3/8”	5
9	400-220179	Self-centering metal seal	1/2"	5-6
10	400-220184	Banjo bolt	3/8” BSP	2
11	400-220212	Fitting		2
12	400-220209	Fitting		2
13	400-220215	Fitting		1
14	400-220213	Fitting		1
15	400-220220	Non-return valve		1
16	400-220214	Fitting		1
17	400-220221	Adjustment valve		1
18	400-220210	Fitting		1
19	400-220202	Pipe fitting	1/2"	1
20	400-220944	Hydraulic pipe		1
21	400-220162	Fitting		1
22	400-220952	Hydraulic pipe		1
23	400-220951	Hydraulic pipe		1
24	400-220185	Banjo fitting	1/2”	2
25	400-220941	Hydraulic hose		1
26	400-220940	Hydraulic hose		1
27	400-220205	Pipe fitting	R1/2”	2
28	400-220175	Banjo fitting	BSP	2
29	400-220932	Hydraulic hose		1
30	400-220177	Self-centering metal seal	1/4”	1

© 2024 Mecanil Oy Ab

31	400-220943	Hydraulic hose (with holding valve)	Block (A) grapple open	1
32	400-220942	Hydraulic hose (with holding valve)	Block (B) grapple close	1
33	400-220163	Contra nut		1
34	400-220157	Forged angle fitting	90 R3/8”	1
35	400-221022	Alt. Hydraulic hose (without holding valve)	Block (A) grapple open	1
36	400-221021	Alt. Hydraulic hose (without holding valve)	Block (B) grapple close	1

© 2024 Mecanil Oy Ab

© 2024 Mecanil Oy Ab

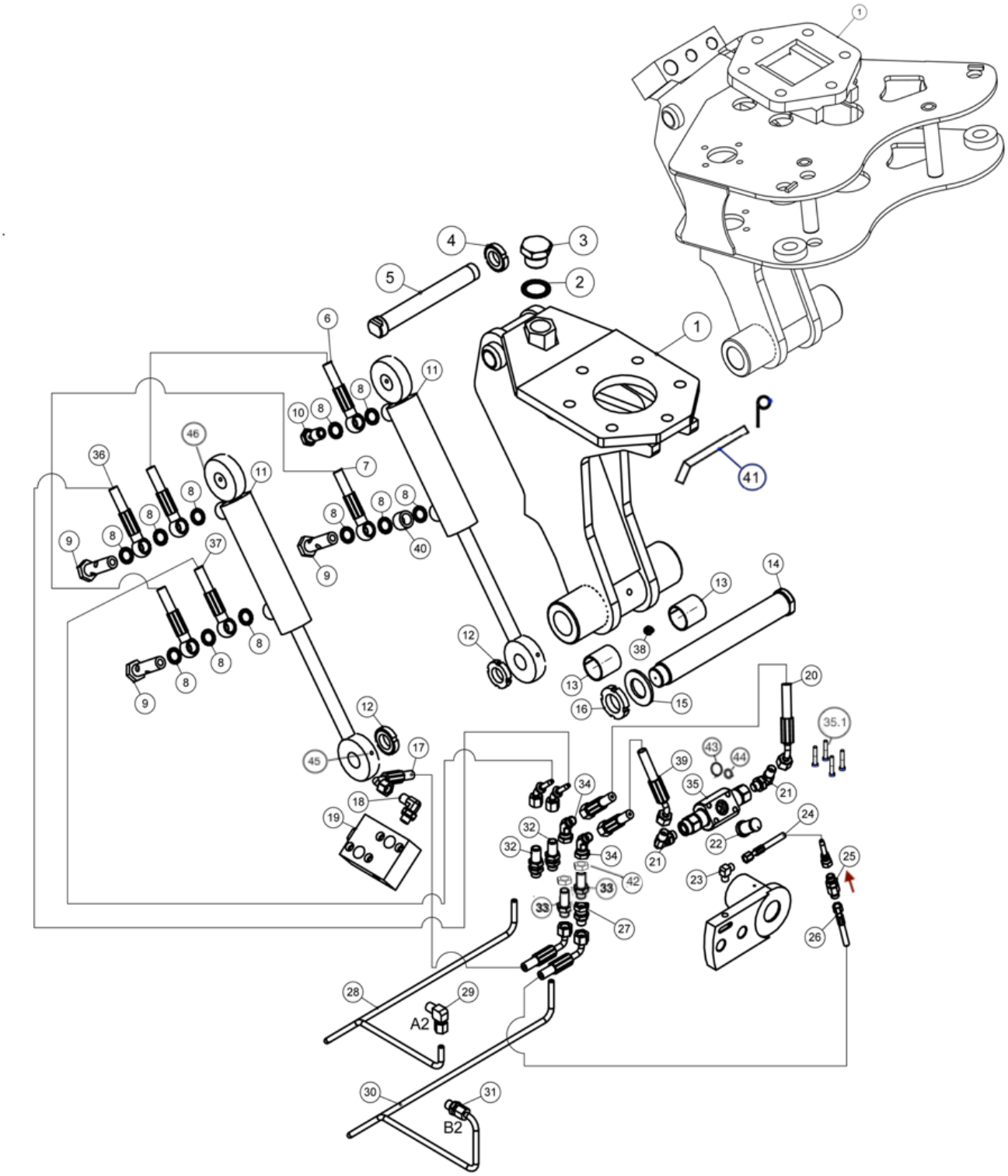
1
2
3
4
5
6
7
8
9
10
11
12
13
14
15
16
17
18
19
20
21
22
23
24
25
26
27
28
29
30
31
32
33
34
35
35.1
36
37
38
39
40
41
42
43
44
45
46
A2
B2

No.	Art. No.	Part	Description	Quantity (pcs.)
1	201-220148	Tilt frame		1
1	201-220318	Tilt frame incl. accumulation	Collecting unit	1
2	400-220182	Self-centering metal seal	R1	1
3	400-220194	Lubrication oil filler cap		1
4	510-220270	Nut KM5	KM5	1
5	201-220018	Shaft		1
6	400-220922	Hydraulic hose		1
7	400-220923	Hydraulic hose		1
8	400-220178	Self-centering metal seal	3/8”	11
9	400-220187	Banjo fitting	Double banjo 3/8”	3
10	400-220184	Banjo fitting	3/8”	1
11	401-220133	Tilt cylinder		2
	402-220299	Seal kit, tilt cylinder		1-2
12	510-220270	Nut KM5	KM5	2
13	404-220048	Bushing	35x39x40	2
14	201-220017	Shaft		1
15	510-220480	Washer	35x45x2,5	1
16	510-220271	Nut KM6	KM6	1
17	400-220926	Hydraulic hose		1
18	400-220154	Fitting	BSP 1/4 - BSPT 1/4	1
19	401-220086	Saw motor block		1
20	400-220924	Hydraulic hose		1
21	400-220154	Fitting	BSP 1/4 - BSPT 1/4	2
22	400-220282	Debris filter		1
23	400-220216	Fitting		1
24	400-220937	Hydraulic hose		1
25	400-220219	Non-return valve		1
26	400-220927	Hydraulic hose		1
27	400-220196	Fitting	BSP outer/inner thread	1
28	400-220950	Hydraulic pipe		1
29	400-220210	Fitting		1
30	400-220949	Hydraulic pipe		1
31	400-220199	Pipe fitting	R1/4	1

© 2024 Mecanil Oy Ab

32	400-220208	Fitting		2
33	400-220162	Fitting		2
34	400-220159	Fitting	45 R1/4”	2
35	400-220223	Lubrication oil pump		1
35.1	510-220482	Bolt	M6x35 12.9	4
36	400-220920	Hydraulic hose		1
37	400-220921	Hydraulic hose		1
38	510-220231	Grease fitting	R1/8”	1
39	400-220925	Hydraulic hose		1
40	400-250123	Banjo distance	3/8	1
41	510-220386	Tiltholder (pin)		1
42	400-220163	Contra nut		2
43	402-220315	O-ring	19,1mm x 1,6mm	1
44	402-220316	O-ring	11,3mm x 2,4mm	1
45	510-220228	Grease fitting	M6x1	2
46	510-220229	Grease fitting	M6x1 90°	2

© 2024 Mecanil Oy Ab

© 2024 Mecanil Oy Ab

Only grapples incl. accumulation (collecting unit)

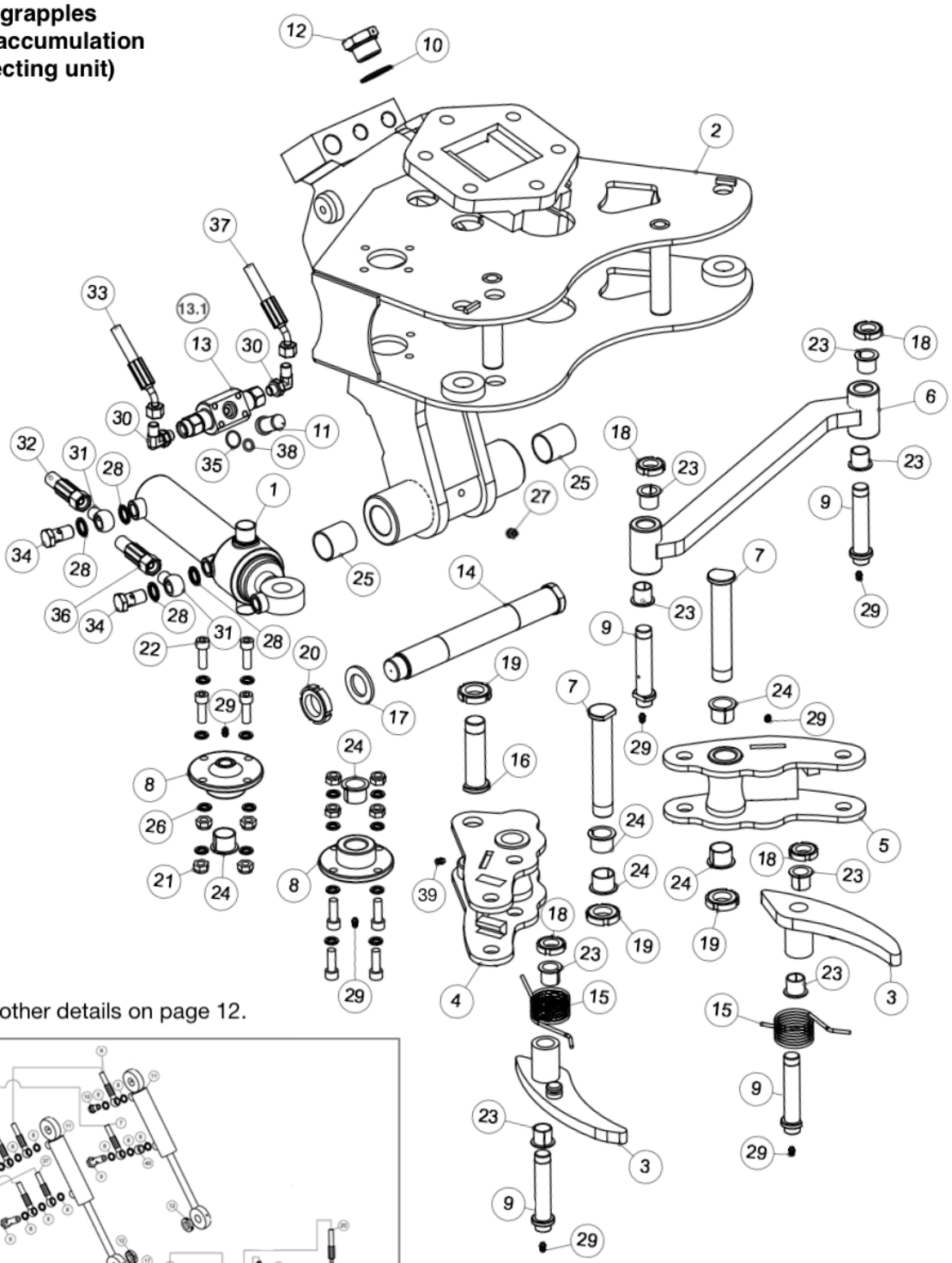

See other details on page 12.

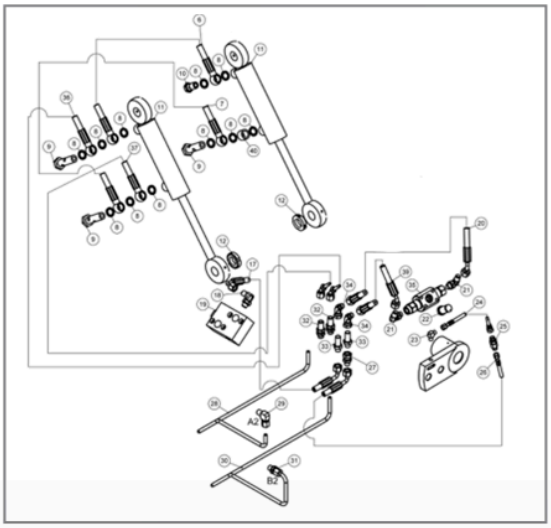

No.	Art. No.	Part	Description	Quantity (pcs.)
1	401-220136	Collector cylinder		1
	402-220304	Seal kit, collector cylinder		1
2	201-220318	Tilt frame, collecting unit		1
3	201-250122.1	Outer claw, collecting unit		2
4	201-250121.2	Right hand inner claw, collecting unit		1
5	201-250121.1	Left hand inner claws, collecting unit		1
6	201-250221	Reaction bar		1
7	201-250217	Pin		2
8	201-250220	Flange for cylinder		2
9	201-250216	Pin		4
10	400-220182	Self centering seal	1”	1
11	400-220282	Debris filter		1
12	400-220194	Oil filler cap		1
13	400-220223	Lubrication oil pump		1
13.1	510-220482	Bolt	M6x35 12.9	4
14	201-220017	Pin		1
15	201-220074	Spring		2
16	201-250222	Pin		1
17	510-220240	Washer	DIN126 30x50x4	1
18	510-220269	Pin nut	KM4, M20x1.5	4
19	510-220270	Pin nut	KM5, M24x1.5	3
20	510-220271	Pin nut	KM6, M30x1.5	1
21	510-220246	Nyloc nut	M10	8
22	510-220254	Hexagonal bolt	M10x30	8
23	404-220046	Bushing	20x23x30x20	8
24	404-220047	Bushing	25x28x35x25	6
25	404-220048	Bushing	35x39x40	2
26	510-220234	Lock washer	M10	8
27	510-220231	Grease fitting	R1/8”	1
28	400-220178	Self-centering seal	3/8”	4
29	510-220228	Grease fitting	M6	7
30	400-220154	Adjustable 90 deg. fitting	1/4”	2
31	400-220172	Banjo fitting	3/8”	2

© 2024 Mecanil Oy Ab

32	400-220967	Hydraulic hose		1
33	400-220925	Hydraulic hose		1
34	400-220184	Banjo bolt		2
35	402-220315	O-ring	19,1mm x 1,6mm	1
36	400-220968	Hydraulic hose		1
37	400-220924	Hydraulic hose		1
38	402-220316	O-ring	11,3mm x 2,4mm	1
39	510-220606	Grease fitting	45° Zink M6x1	1

© 2024 Mecanil Oy Ab

© 2024 Mecanil Oy Ab

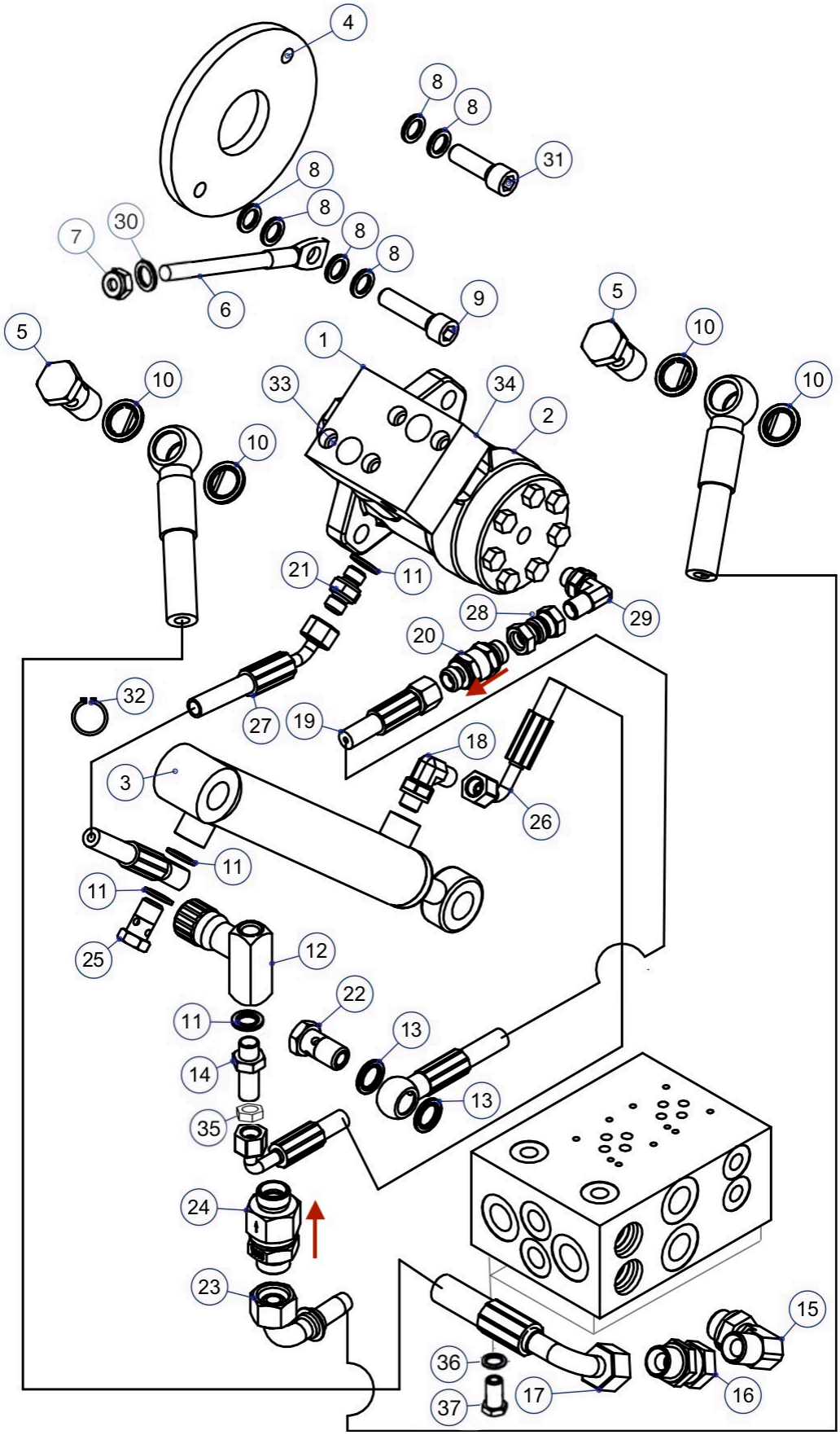
4
8
8
31
8
8
8
8
7
30
6
9
5
10
10
5
10
1
33
34
2
10
21
11
28
29
20
32
27
19
18
26
3
11
11
25
12
11
22
13
14
13
35
24
23
15
36
17
16
37

No.	Art. No.	Part	Description	Quantity (pcs.)
1	401-220086	Saw motor block		1
2	401-220083	Saw motor 40cc	Alt. 50cc (401-220084)	1
3	401-220135	Saw cylinder		1
	402-220297	Seal kit, saw cylinder		1
4	201-220014	Plate		1
5	400-220185	Banjo fitting	1/2”	2
6	510-220061	Drive belt tensioner		1
7	510-220246	Nut	Nyloc NM10	1
8	510-220235	Washer	Lock M12	6
9	510-220256	Bolt	M12x50 12.9	1
10	400-220179	Self-centering metal seal	1/2”	4
11	400-220177	Self-centering metal seal	1/4”	4
12	400-220221	Adjustment valve		1
13	400-220178	Self-centering metal seal	3/8”	2
14	400-220162	Fitting		1
15	400-220152	Fitting	BSP 1/2 - BSPT 1/2	1
16	400-220198	Fitting	BSP outer/inner thread	1
17	400-220931	Hydraulic hose		1
18	400-220154	Fitting	BSP 1/4 - BSPT 1/4	1
19	400-220939	Hydraulic hose		1
20	400-220217	Non-return valve		1
21	400-220169	Fitting	BSP outer thread	1
22	400-220184	Banjo fitting	3/8”	1
23	400-220932	Hydraulic hose		1
24	400-220220	Non-return valve		1
25	400-220183	Banjo fitting	1/4”	1
26	400-220930	Hydraulic hose		1
27	400-220929	Hydraulic hose		1
28	400-220155	Fitting	BSP inner thread	1
29	400-220154	Fitting	BSP 1/4 - BSPT 1/4	1
30	510-220377	Washer	10mm	1
31	510-220255	Bolt	M12x40 12.9	1

© 2024 Mecanil Oy Ab

32	510-220065	Locking ring, saw cylinder		1
33	510-220251	Bolt	M8x40 12.9	4
34	402-220509	O-ring	23,47x2,62	2
35	400-220163	Contra nut		1
36	510-220234	Lock washer	M10	4
37	510-220259	Allen screw	M10x20	4

© 2024 Mecanil Oy Ab

© 2024 Mecanil Oy Ab

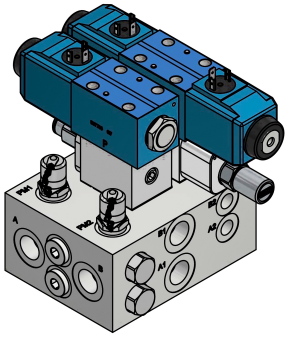

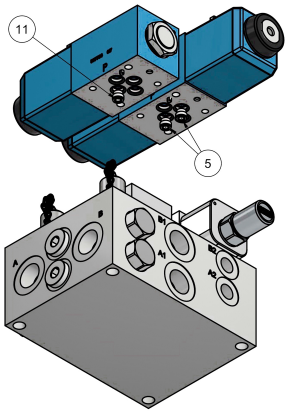
11
5

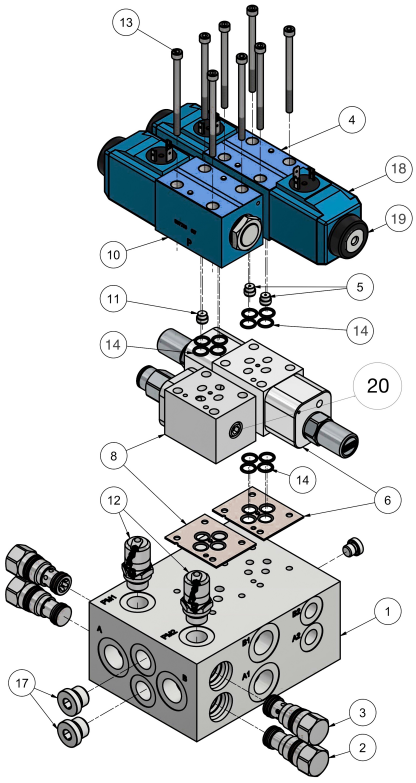
13
4
18
19
10
5
11
14
14
20
8
14
12
6
1
17
3
2

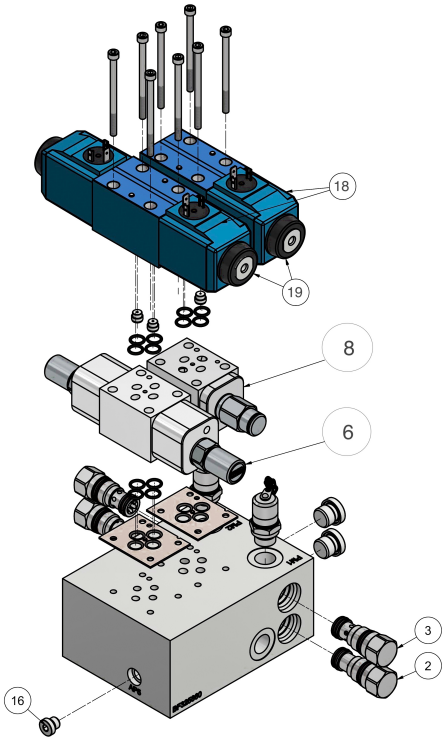
18
19
8
6
3
2
16

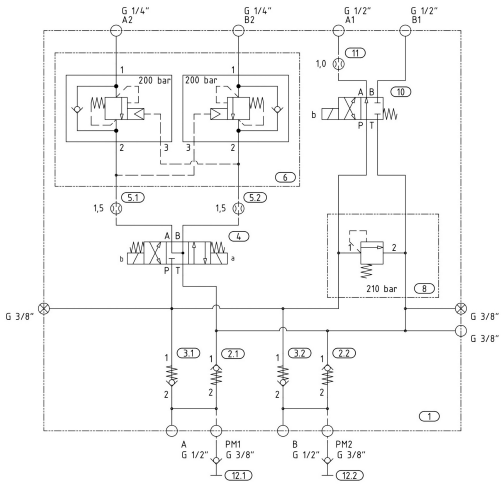
G 1/4" A2
G 1/4" B2
G 1/2" A1
G 1/2" B1
200 bar
200 bar
210 bar
G 3/8"
G 3/8"
G 3/8"
A G 1/2"
PM1 G 3/8"
B G 1/2"
PM2 G 3/8"

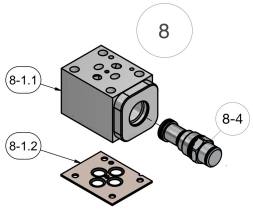
8
8-1.1
8-4
8-1.2

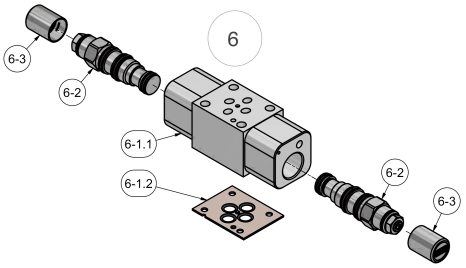
6
6-3
6-2
6-1.1
6-1.2
6-2
6-3

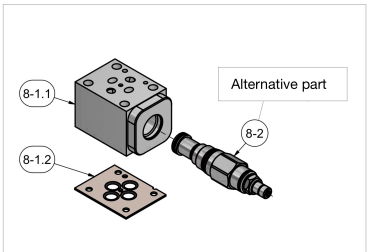
8-1.1
Alternative part
8-2
8-1.2

No.	Art. No.	Part	Description	Quantity (pcs.)
	401-220514	Valve set	Complete	1
1	401-220476	Manifold	Not in stock	1
2	401-220322	Check valve, lower		2
3	401-220323	Check valve, upper		2
4	401-220383	Directional valve, tilt		1
5	401-220327	Restrictor plug	1,5mm	2
6	401-220479	Tilt holding valve, assembly		1
6-1.1	401-220388	Manifold	Not in stock	1
6-1.2	401-220446	Seal plate & seal kit, including 4 x part nr 14	Not in stock	1
6-2	401-220389	Counterbalance valve	Not in stock	2
6-3	401-220478	Tamper resistant cover	Not in stock	2
8	401-220411	Relief valve assembly, not adjustable		1
8-1.1	401-220329	Manifold	Not in stock	1
8-1.2	401-220446	Seal plate & seal kit, including 4 x part nr 14	Not in stock	1
8-4	401-220665	Pressure relief valve, not adjustable	Not in stock	1
8-2	401-220477	Alternative part. Pressure relief valve, adjustable		1
10	401-220091	Directional valve, saw		1
11	401-220328	Restrictor plug	1,0mm	1
12	400-220224	Pressure measurement point		2
13	510-220475	Hexagon socket head cap screw		8
14	402-220652	O-ring NBR90		16
16	401-220448	Plug		1
17	401-220447	Plug		2
18	401-220089	Coil	12VDC, standard for RC	3
18	401-220090	Alt. Coil	24VDC	3
19	510-220483	Retaining nut		3
20	401-220421	Plug		1

© 2024 Mecanil Oy Ab

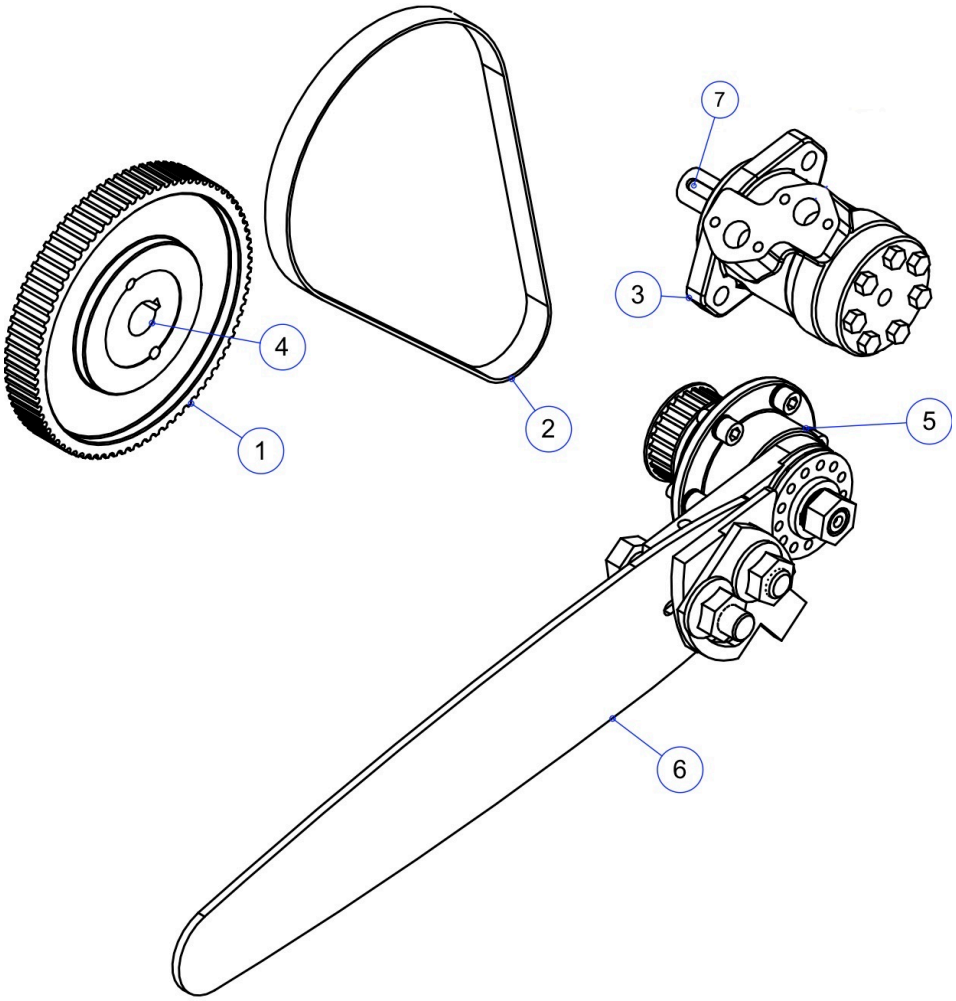
7
3
4
2
5
1
6

No.	Art. No.	Part	Description	Quantity (pcs.)
1	406-220053	Belt wheel large		1
2	406-220051	Drive belt		1
2	406-220052	Alt. Kevlar reinforced belt		1
3	401-220083	Saw motor 40cc	Alt. 50cc (401-220084)	1
4	406-220054	Belt wheel centre	Including bolts	1
5	201-220004K	Saw bar attachment complete		1
6	410-220393	Saw bar 22”		1
6	410-220394	Alt. Saw bar 25”		1
7	510-220465	Wedge	8x7x32	1

© 2024 Mecanil Oy Ab

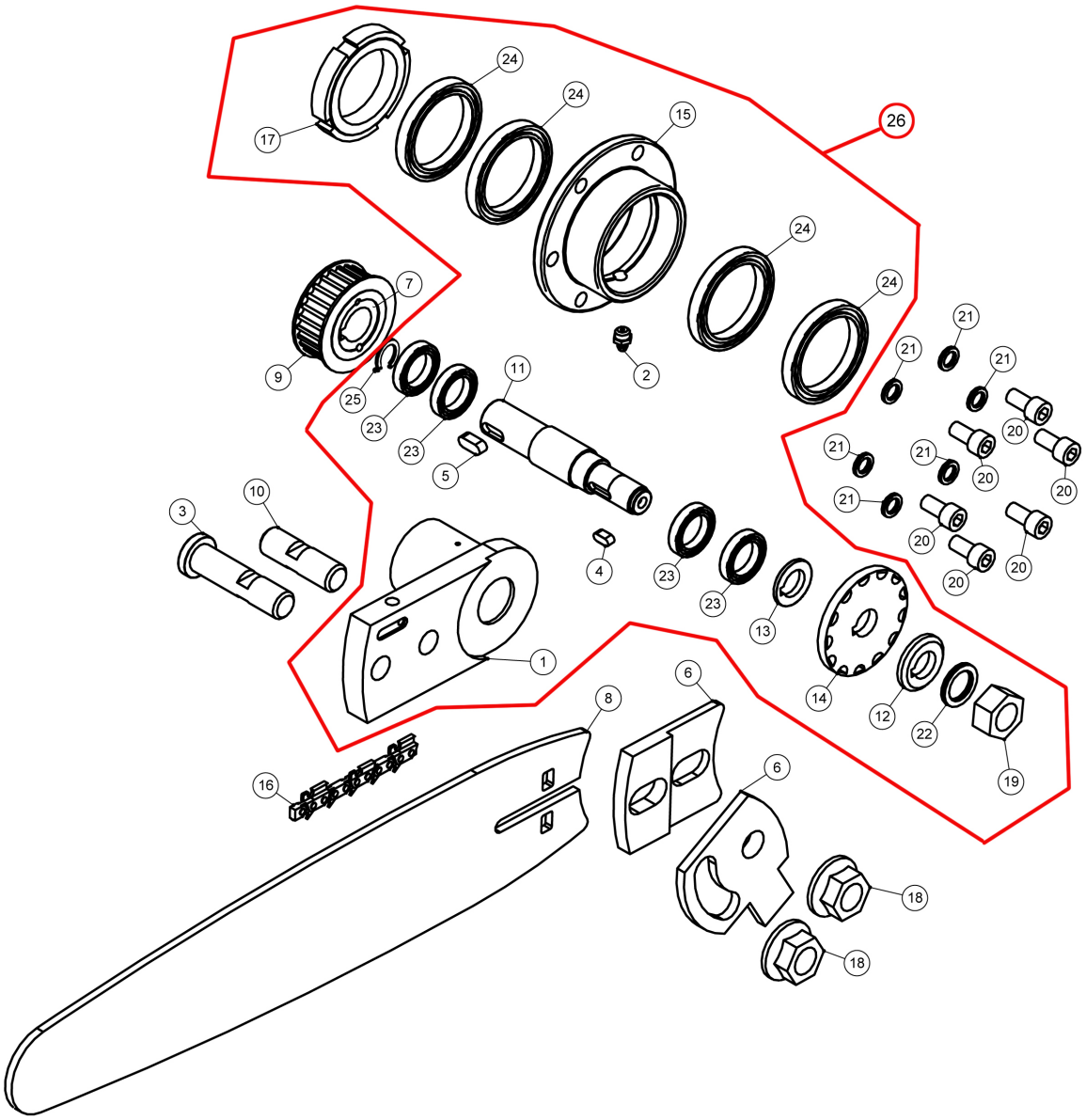

© 2024 Mecanil Oy Ab

No.	Art. No.	Part	Description	Quantity (pcs.)
1	201-220004	Saw bar attachment		1
2	510-220231	Grease fitting	R1/8”	1
3	201-220027	Saw bar bolt cylinder		1
4	510-220082	Wedge	8x7x15	1
5	510-220012	Wedge	8x7x20	1
6	201-220021	Chain tensioner (set)		1
7	406-220056	Belt wheel small centre	Including bolts	1
8	410-220393	Saw bar 22”		1
8	410-220394	Alt. Saw bar 25”		1
9	406-220055	Belt wheel small		1
10	201-220028	Saw bar bolt		1
11	201-220024	Saw shaft		1
12	201-220007	Saw washer		1
13	201-220008	Distance washer		1
14	410-220062	Drive wheel		1
15	201-220009	Flange		1
16	410-220026	Saw chain (22”)		1
16	410-220029	Alt. Saw chain (25”)		1
17	510-220276	Nut KM11	KM11 M55x2	1
18	510-220064	Nut	M20	2
19	510-220249	Nut	M20x1,5	1
20	510-220252	Bolt	M10x25	6
21	510-220234	Washer	M10	6
22	510-220238	Washer	Lock M20	1
23	404-220072	Bearing small		4
24	404-220073	Bearing large		4
25	510-220067	Locking washer	37x1,5	1
26	201-220004K	Saw bar attachment complete		1

© 2024 Mecanil Oy Ab

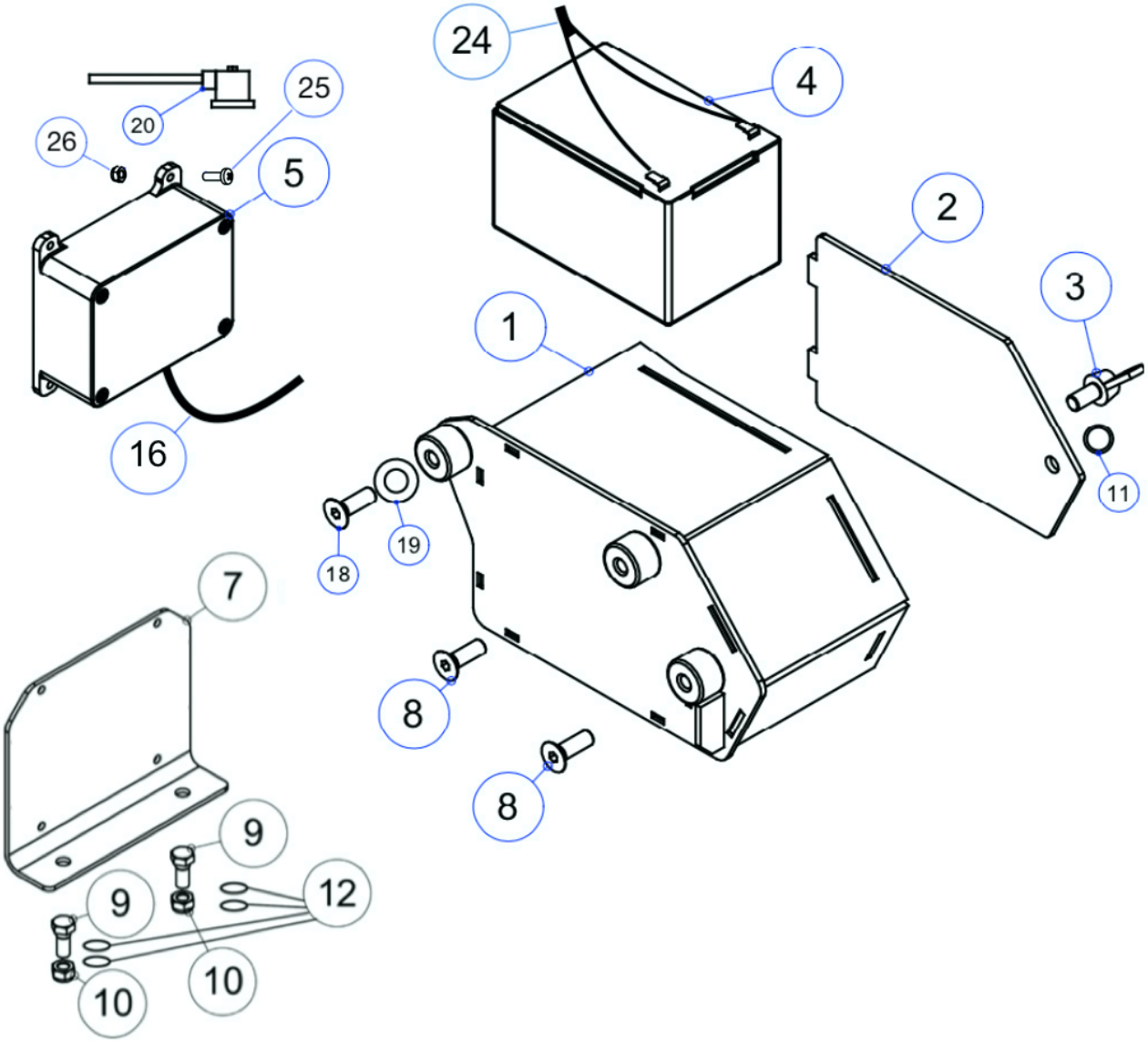
24
4
25
20
26
5
2
3
1
16
11
19
18
7
8
8
9
12
9
10
10

No.	Art. No.	Part	Description	Quantity (pcs.)
1	201-220149	Battery box		1
2	201-220076	Lid battery box		1
3	510-220278	Wing bolt	M10x20	1
4	432-220658	Battery 12V LiFePO4 8Ah (96Wh)		2
5	430-220116	Radio control receiver		1
7	201-220075	Receiver plate		1
8	510-220266	Bolt	M10x30	2
9	510-220258	Bolt	M8x25	2
10	510-220243	Nut	Nyloc NM8	2
11	510-220069	Locking ring	9x1,0	1
12	510-220499	Washer	M8 ZN	4
16	431-DC5525M	Power cable		1
18	510-220260	Bolt	M10x35	1
19	510-220234	Lock washer	M10	1
20	431-220429	Alt. 1. Connector	Without collecting unit	3
20	431-220429	Alt. 2. Connector	With collecting unit	4
24	431-DC5525F	Power cable		1
25	510-220257	Bolt	M5x16	4
26	510-220241	Locknut	M5	4

© 2024 Mecanil Oy Ab

RC-T



RC-M

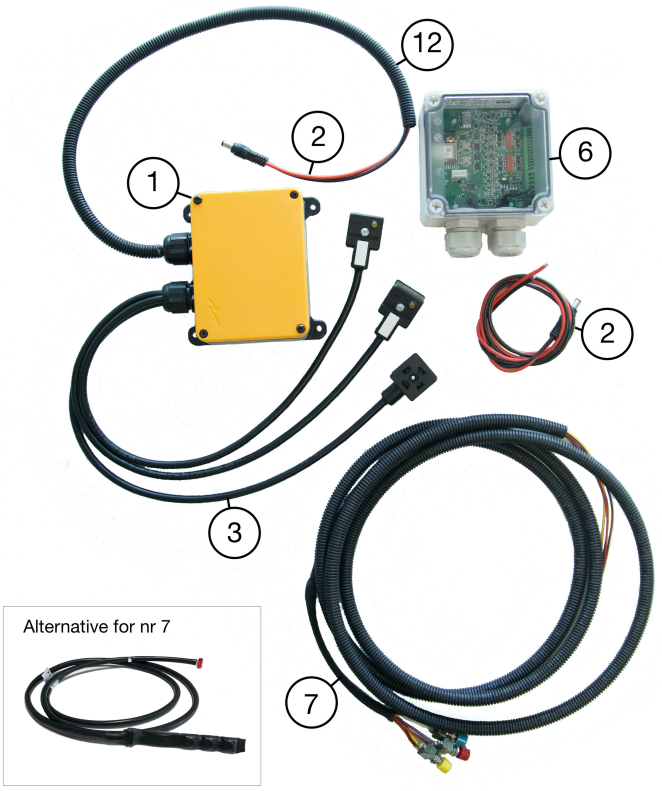

Alternative for nr 7

RC-I

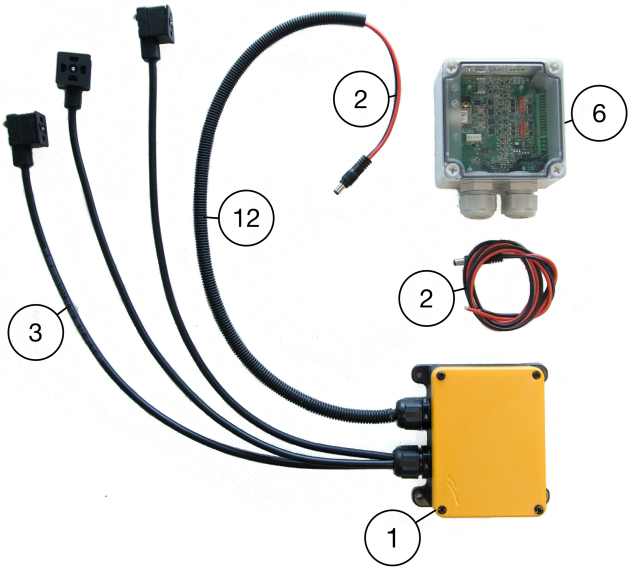

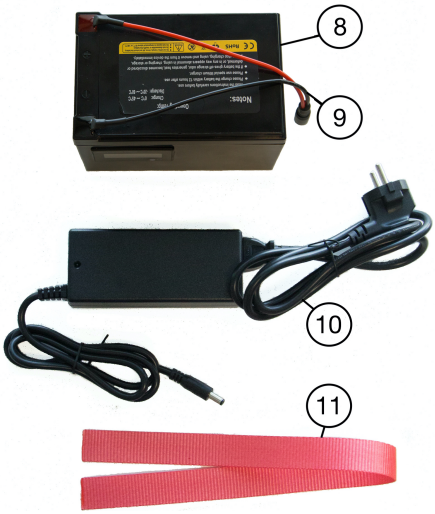

No.	Art. No.	Part	Description	Quantity (pcs.)
	RC-T			
1	430-220116	Radio control receiver		1
2	431-DC5525M	Power cable		1
3	431-220429	Connector		3
4	430-220113	Remote control sender	Handheld	1
5	430-220118	Clip for remote control sender		1
12	431-220661	Cable shield	58cm	1
	RC-M			
1	430-220116	Radio control receiver		1
2	431-DC5525M	Power cable		2
3	431-220429	Connector	(Models with collecting unit have 4 connectors)	3
6	430-220130	IO-transmitter		1
7	430-220101	3 control buttons + cable to transm.		1
7	430-220285	4 control buttons + cable to transm.	for models with collecting unit	1
	430-220145	3 flex buttons	Alternative for nr 7	1
	430-220146	6 flex buttons	Alternative for nr 7	1
12	431-220661	Cable shield	58cm	1
	RC-I			
1	430-220116	Radio control receiver		1
2	431-DC5525M	Power cable		2
3	431-220429	Connector		3
6	430-220130	IO-transmitter		1
12	431-220661	Cable shield	58cm	1
8	432-220658	Battery 12V LiFePO4 8Ah (96Wh)		2
9	431-DC5525F	Power cable		1
10	430-220128US	Battery charger	Only for LifePO4 batteries	1
10	430-220128EU	Battery charger	Only for LifePO4 batteries	1
11	402-220464	Battery strap		1

© 2024 Mecanil Oy Ab

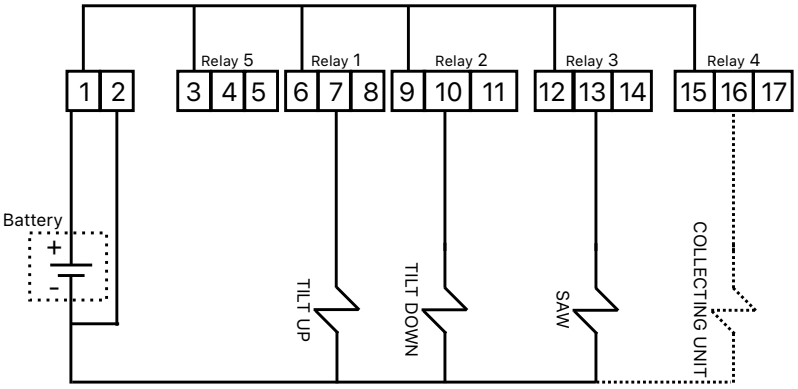
Relay 5
Relay 1
Relay 2
Relay 3
Relay 4
1 2
3 4 5
6 7 8
9 10 11
12 13 14
15 16 17
Battery
+
-
TILT UP
TILT DOWN
SAW
COLLECTING UNIT

