Mecanil Products

MECANIL SG220

Spare parts & Technical information

GENERATION 2

All rights reserved. Specifications are subject to alteration.
Mecanil Oy Ab can not be held responsible for possible type errors or inconsistencies in this spare parts list.

01/2025

Part numbers in this book are links. Select one to open that part in the Grapplesawtrucks.com parts store.

© 2025 Mecanil Oy Ab

Serial number: _____

Information and parts specific for this product:

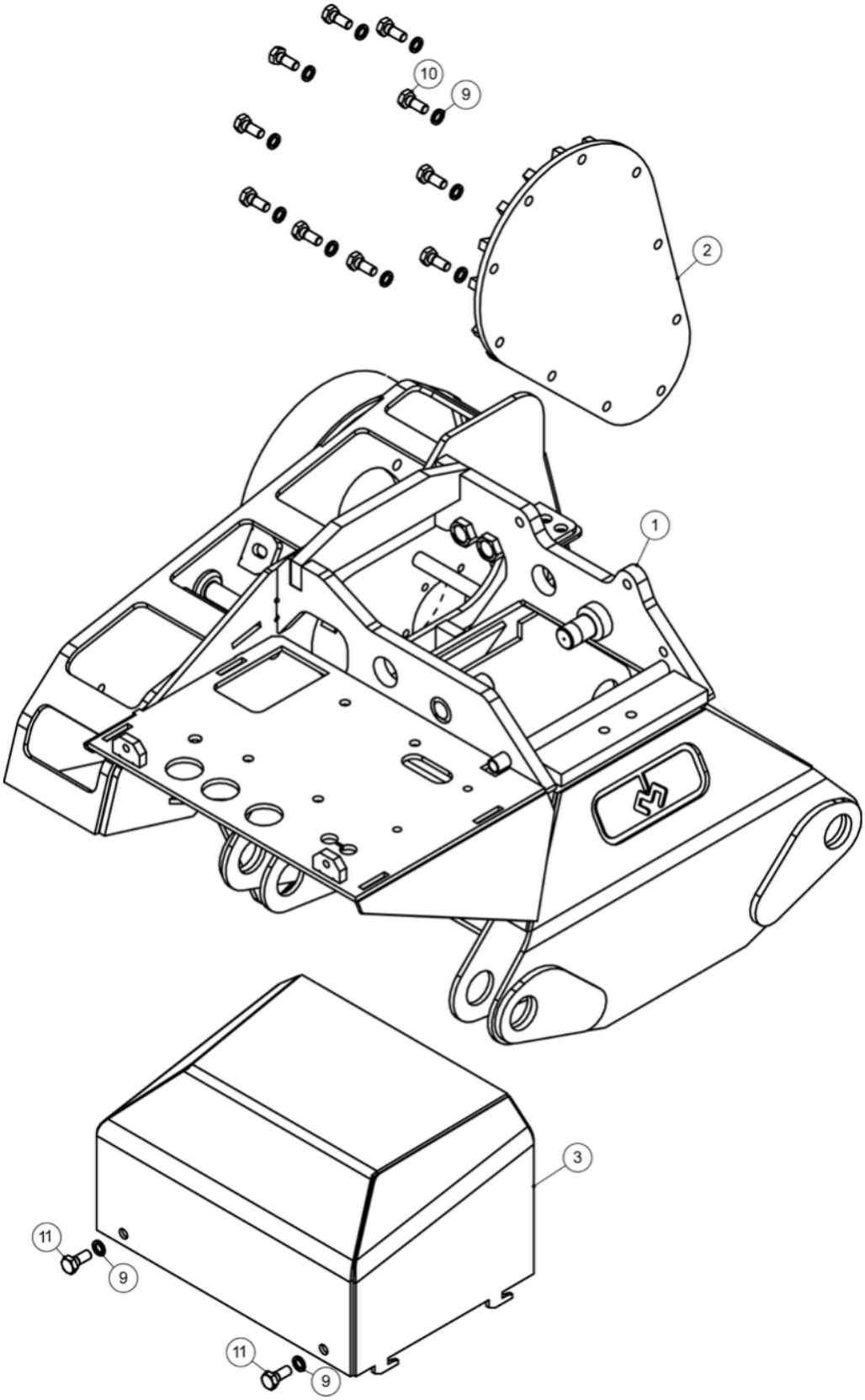
10
9
2
1
3
11
9
11
9

No.	Art. No.	Part	Description	Quantity (pcs.)
1	201-220147	Grapple frame		1
2	201-220502	Lid, drive belt		1
3	201-220140	Lid, valve set		1
9	510-220377	Washer	M10	12
10	510-220260	Bolt	M10x35 8.8	10
11	510-220259	Bolt	M10x20 8.8ZN	2

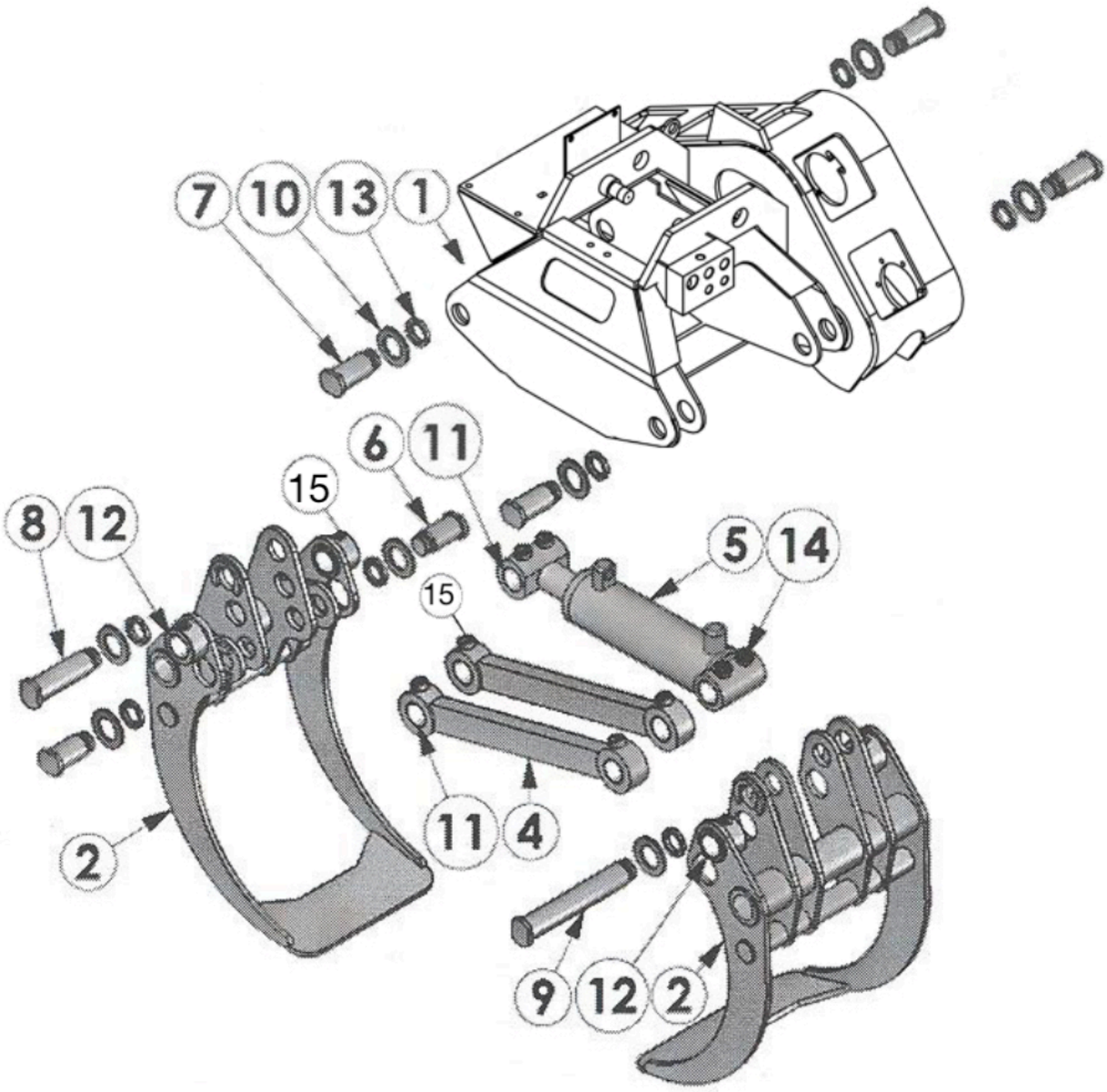

© 2025 Mecanil Oy Ab

No.	Art. No.	Part	Description	Quantity (pcs.)
1	201-220147	Grapple frame		1
2	201-220106	Log grapple claws (pair)	Claw alt. 1	1
2	201-220107	Energy grapple claws, open ended (pair)	Claw alt. 2	1
2	201-220105	A-model claws, with diagonal plates (pair)	Claw alt. 3	1
4	201-220143	Guide bar		2
5	401-220131	Grapple cylinder		1
	402-220298	Seal kit, grapple cylinder		1
6	201-220035	Pin, guide bar		2
7	201-220034	Pin, grapple claw		4
8	201-220037	Pin, grapple cylinder shaft		1
9	201-220036	Pin, grapple cylinder, guide bar		1
10	510-220291	Washer		8
11	404-220290	Bushing 4040		8
12	404-220289	Bushing 4050		4
13	510-220272	Nut KM7	KM7	8
14	510-220228	Grease fitting	M6 straight	2
15	510-220230	Grease fitting	M10x1 straight	8

© 2025 Mecanil Oy Ab

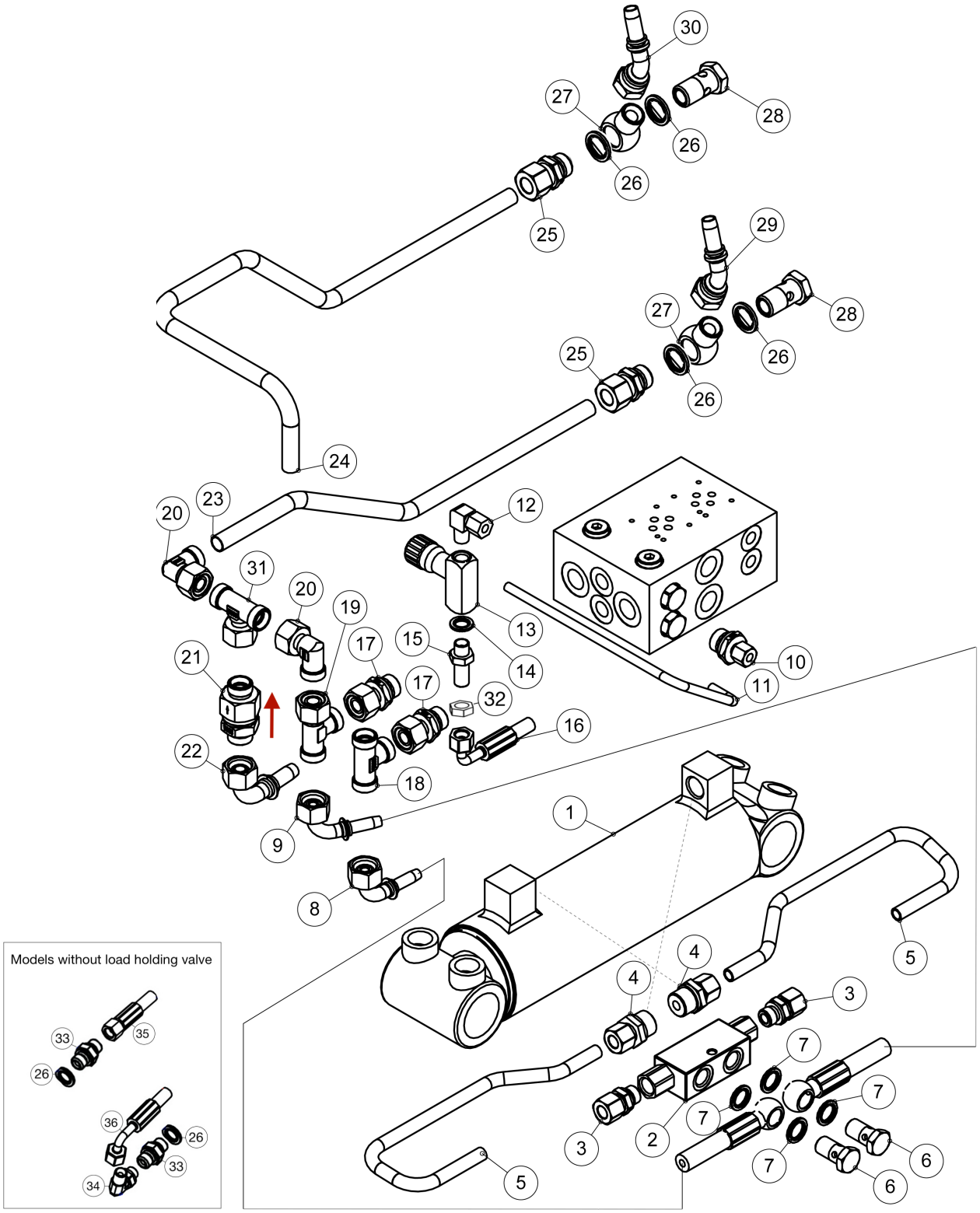
30
27
28
26
26
25
29
27
28
25
26
26
24
20
23
12
31
20
19
13
21
17
15
14
17
32
16
22
18
9
1
8
5
4
4
3
7
7
3
2
7
7
6
6
5
Models without load holding valve
33
35
26
36
26
33
34

No.	Art. No.	Part	Description	Quantity (pcs.)
1	401-220131	Grapple cylinder		1
2	400-220222	Load holding valve		1
3	400-220206	Fitting	R3/8	2
4	400-220207	Fitting	R1/2	2
5	400-220947	Hydraulic pipe		2
6	400-220184	Fitting	3/8” BSP	2
7	400-220178	Self-centering metal seal	3/8”	4
8	400-220935	Hydraulic hose	Block (B) - grapple close	1
9	400-220936	Hydraulic hose	Block (A) - grapple open	1
10	400-220202	Fitting	1/2”	1
11	400-220944	Hydraulic pipe		1
12	400-220210	Fitting		1
13	400-220221	Adjustment valve		1
14	400-220177	Self-centering metal seal	1/4”	1
15	400-220162	Fitting		1
16	400-220930	Hydraulic hose		1
17	400-220209	Fitting		2
18	400-220213	Fitting		1
19	400-220215	Fitting		1
20	400-220212	Fitting		2
21	400-220220	Non-return valve		1
22	400-220932	Hydraulic hose		1
23	400-220952	Hydraulic pipe		1
24	400-220951	Hydraulic pipe		1
25	400-220205	Fitting	R1/2”	2
26	400-220179	Self-centering metal seal	1/2”	4-6
27	400-220175	Fitting	BSP	2
28	400-220185	Fitting	1/2”	2
29	400-220933	Hydraulic hose		1
30	400-220934	Hydraulic hose		1
31	400-220214	Fitting		1
32	400-220163	Contra nut		1

© 2025 Mecanil Oy Ab

33	400-220168	Fitting	Double fitting BSP	2
34	400-220157	Forged angle fitting	90 R3/8”	1
35	400-221046	Hydraulic hose (without holding valve)	Block (A) - grapple open	1
36	400-221045	Hydraulic hose (without holding valve)	Block (B) - grapple close	1

© 2025 Mecanil Oy Ab

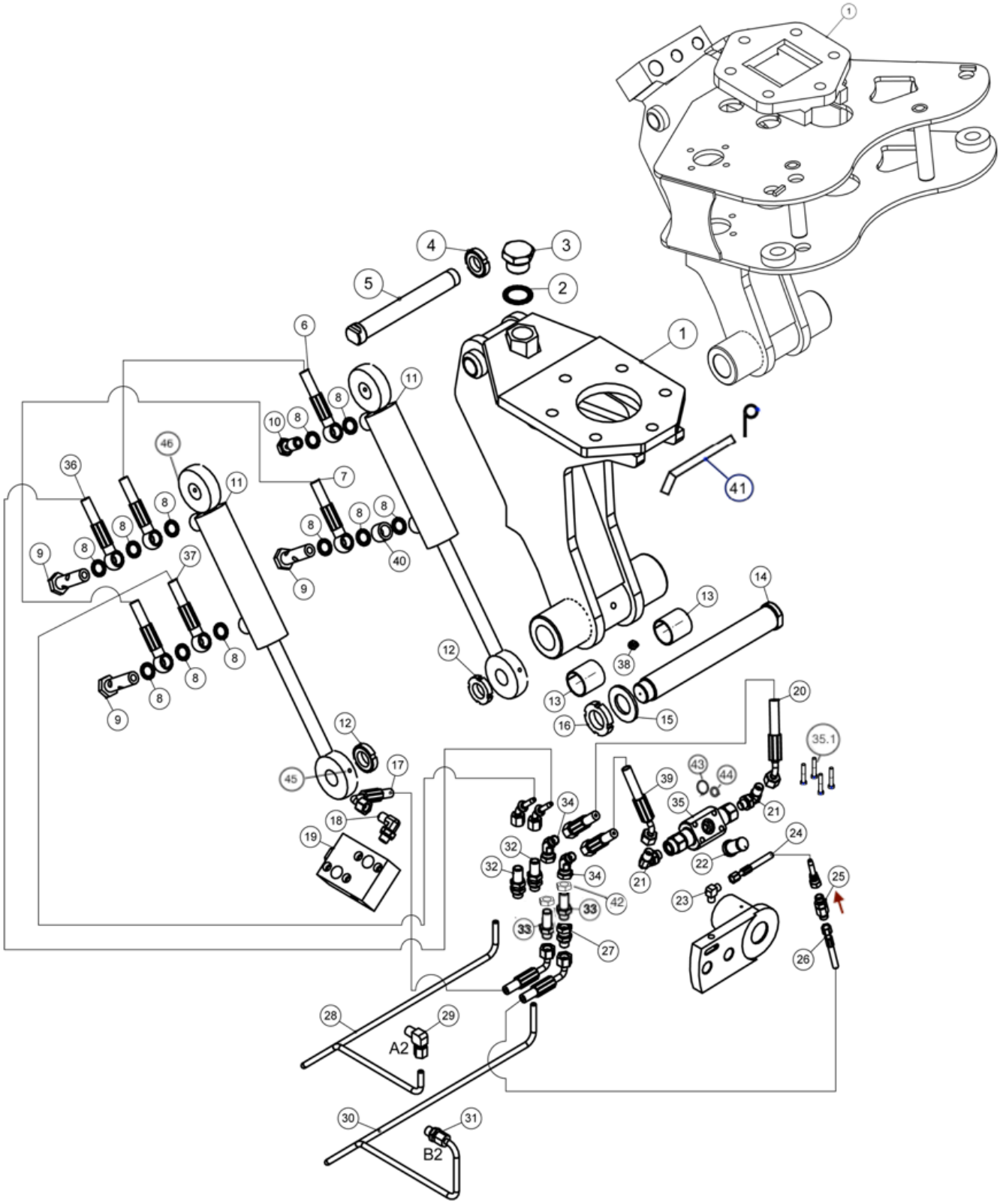
1
2
3
4
5
6
7
8
9
10
11
12
13
14
15
16
17
18
19
20
21
22
23
24
25
26
27
28
29
30
31
32
33
34
35
35.1
36
37
38
39
40
41
42
43
44
45
46
A2
B2

No.	Art. No.	Part	Description	Quantity (pcs.)
1	201-220148	Tilt frame		1
1	201-220318	Tilt frame incl. accumulation	Collecting unit	1
2	400-220182	Self-centering metal seal	R1	1
3	400-220194	Lubrication oil filler cap		1
4	510-220270	Nut KM5	KM5	1
5	201-220018	Shaft		1
6	400-220922	Hydraulic hose		1
7	400-220923	Hydraulic hose		1
8	400-220178	Self-centering metal seal	3/8”	11
9	400-220187	Fitting	Double banjo 3/8”	3
10	400-220184	Fitting	3/8”	1
11	401-220133	Tilt cylinder		2
	402-220299	Seal kit, tilt cylinder		1-2
12	510-220270	Nut KM5	KM5	2
13	404-220048	Bushing	35x39x40	2
14	201-220017	Shaft		1
15	510-220480	Washer	35x45x2,5	1
16	510-220271	Nut KM6	KM6	1
17	400-220926	Hydraulic hose		1
18	400-220154	Fitting	BSP 1/4 - BSPT 1/4	1
19	401-220086	Saw motor block		1
20	400-220924	Hydraulic hose		1
21	400-220154	Fitting	BSP 1/4 - BSPT 1/4	2
22	400-220282	Sifter		1
23	400-220216	Fitting		1
24	400-220937	Hydraulic hose		1
25	400-220219	Non-return valve		1
26	400-220927	Hydraulic hose		1
27	400-220196	Fitting	BSP outer/inner thread	1
28	400-220950	Hydraulic pipe		1
29	400-220210	Fitting		1
30	400-220949	Hydraulic pipe		1

© 2025 Mecanil Oy Ab

31	400-220199	Fitting	R1/4	1
32	400-220208	Fitting		2
33	400-220162	Fitting		2
34	400-220159	Fitting	45 R1/4”	2
35	400-220223	Lubrication oil pump		1
35.1	510-220482	Bolt	M6x35 12.9	4
36	400-220920	Hydraulic hose		1
37	400-220921	Hydraulic hose		1
38	510-220231	Grease fitting	R1/8”	1
39	400-220925	Hydraulic hose		1
40	400-250123	Fitting	3/8	1
41	510-220386	Tiltholder (pin)		1
42	400-220163	Contra nut		2
43	402-220315	O-ring	19,1mm x 1,6mm	1
44	402-220316	O-ring	11,3mm x 2,4mm	1
45	510-220228	Grease fitting	M6x1	2
46	510-220229	Grease fitting	M6x1 90°	2

© 2025 Mecanil Oy Ab

© 2025 Mecanil Oy Ab

Only grapples incl. accumulation (collecting unit)

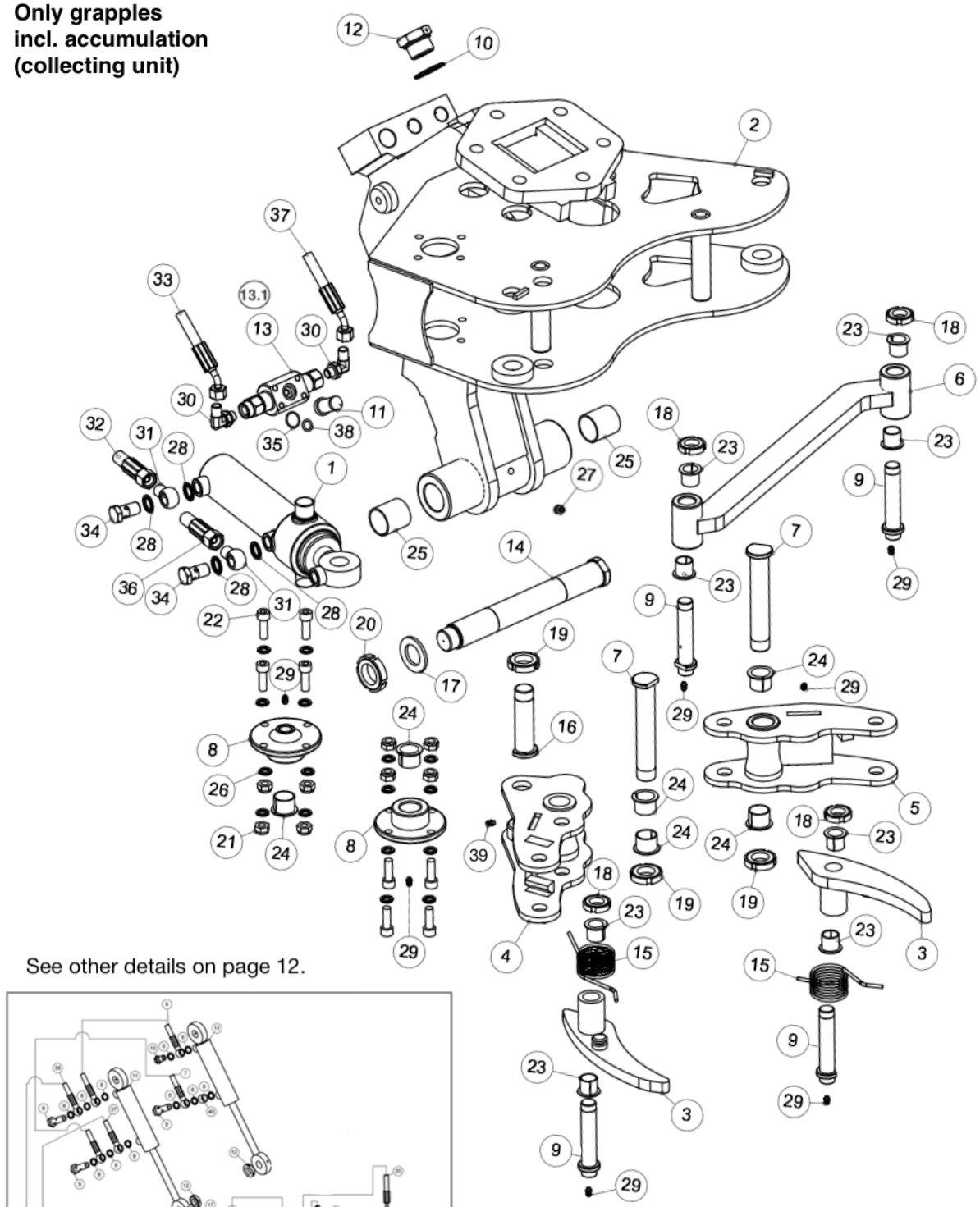

See other details on page 12.

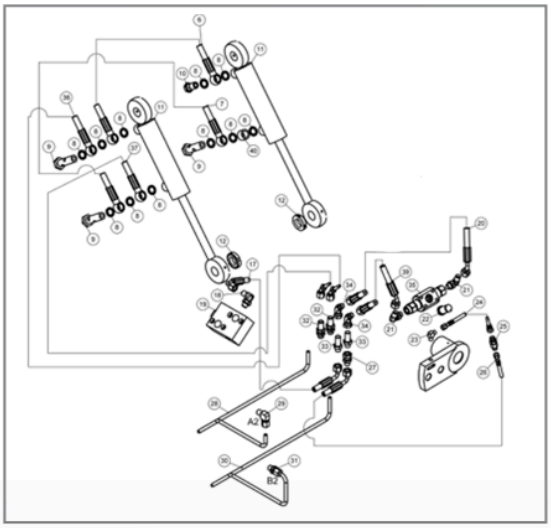

No.	Art. No.	Part	Description	Quantity (pcs.)
1	401-220136	Collector cylinder		1
	402-220304	Seal kit, collector cylinder		1
2	201-220318	Tilt frame, Collecting unit		1
3	201-250122.1	Outer claw, Collecting unit		2
4	201-250121.2	Right hand inner claw, Collecting unit		1
5	201-250121.1	Left hand inner claw, Collecting unit		1
6	201-250221	Reaction bar		1
7	201-250217	Pin		2
8	201-250220	Flange for cylinder		2
9	201-250216	Pin		4
10	400-220182	Self-centering seal	1”	1
11	400-220282	Debris filter		1
12	400-220194	Oil filler cap		1
13	400-220223	Lubrication oil pump		1
13.1	510-220482	Bolt	M6x35 12.9	4
14	201-220017	Pin		1
15	201-220074	Spring		2
16	201-250222	Pin		1
17	510-220240	Washer	DIN126 30x50x4	1
18	510-220269	Pin nut	KM4, M20x1.5	4
19	510-220270	Pin nut	KM5, M24x1.5	3
20	510-220271	Pin nut	KM6, M30x1.5	1
21	510-220246	Nyloc nut	M10	8
22	510-220254	Hexagonal bolt	M10x30	8
23	404-220046	Bushing	20x23x30x20	8
24	404-220047	Bushing	25x28x35x25	6
25	404-220048	Bushing	35x39x40	2
26	510-220234	Lock washer	M10	8
27	510-220231	Grease fitting	R1/8”	1
28	400-220178	Self-centering seal	3/8”	4
29	510-220228	Grease fitting	M6	7
30	400-220154	Adjustable 90 deg. fitting	1/4”	2
31	400-220172	Banjo fitting	3/8”	2

© 2025 Mecanil Oy Ab

32	400-220967	Hydraulic hose		1
33	400-220925	Hydraulic hose		1
34	400-220184	Banjo bolt		2
35	402-220315	O-ring	19,1mm x 1,6mm	1
36	400-220968	Hydraulic hose		1
37	400-220924	Hydraulic hose		1
38	402-220316	O-ring	11,3mm x 2,4mm	1
39	510-220606	Grease fitting	45° Zink M6x1	1

© 2025 Mecanil Oy Ab

© 2025 Mecanil Oy Ab

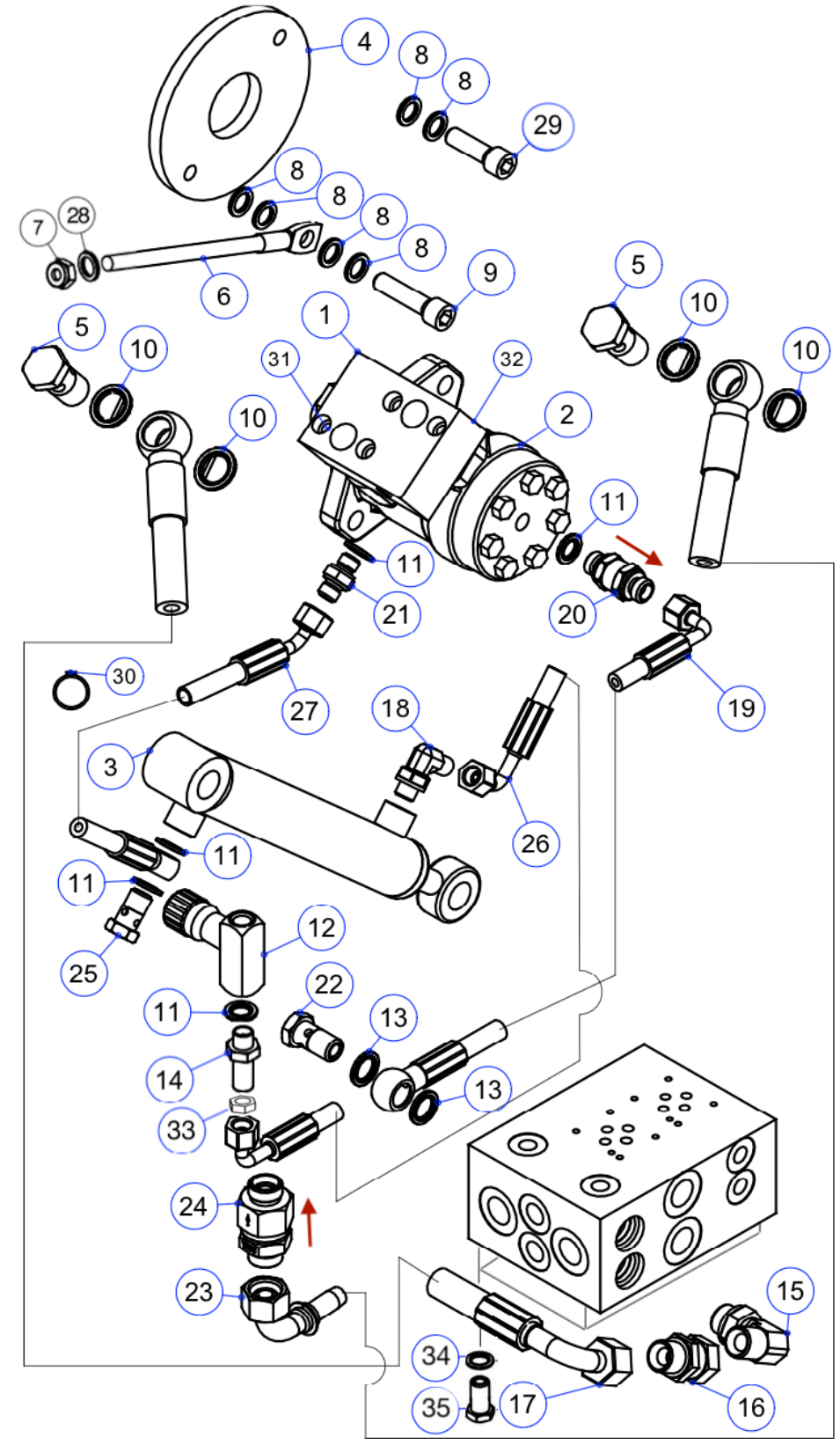
4
8
8
29
8
8
8
8
9
7
28
6
5
10
10
1
31
32
2
10
5
10
10
11
11
21
20
30
27
18
19
3
26
11
11
12
25
22
11
13
14
13
33
24
23
15
34
35
17
16

No.	Art. No.	Part	Description	Quantity (pcs.)
1	401-220086	Saw motor block		1
2	401-220083	Saw motor 40cc		1
3	401-220135	Saw cylinder		1
	402-220297	Seal kit, saw cylinder		1
4	201-220014	Plate		1
5	400-220185	Fitting	1/2”	2
6	510-220061	Drive belt tensioner		1
7	510-220246	Nut	Nyloc NM10	1
8	510-220235	Washer	Lock M12	6
9	510-220256	Bolt	M12x50 12.9	1
10	400-220179	Self-centering metal seal	1/2”	4
11	400-220177	Self-centering metal seal	1/4”	5
12	400-220221	Adjustment valve		1
13	400-220178	Self-centering metal seal	3/8”	2
14	400-220162	Fitting		1
15	400-220152	Fitting	BSP 1/2 - BSPT 1/2	1
16	400-220198	Fitting	BSP outer/inner thread	1
17	400-220931	Hydraulic hose		1
18	400-220154	Fitting	BSP 1/4 - BSPT 1/4	1
19	400-220928	Hydraulic hose		1
20	400-220217	Non-return valve		1
21	400-220169	Fitting	BSP outer thread	1
22	400-220184	Fitting	3/8”	1
23	400-220932	Hydraulic hose		1
24	400-220220	Non-return valve		1
25	400-220183	Fitting	1/4”	1
26	400-220930	Hydraulic hose		1
27	400-220929	Hydraulic hose		1
28	510-220377	Washer	10mm	1
29	510-220255	Bolt	M12x40 12.9	1
30	510-220065	Locking ring, saw cylinder		1
31	510-220251	Bolt	M8x40 12.9	4

© 2025 Mecanil Oy Ab

32	402-220509	O-ring	23,47x2,62	2
33	400-220163	Contra nut		1
34	510-220234	Lock washer	M10	4
35	510-220259	Allen screw	M10x20	4

© 2025 Mecanil Oy Ab

© 2025 Mecanil Oy Ab

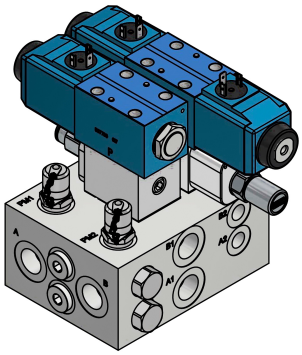

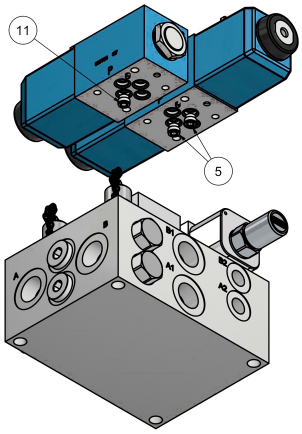

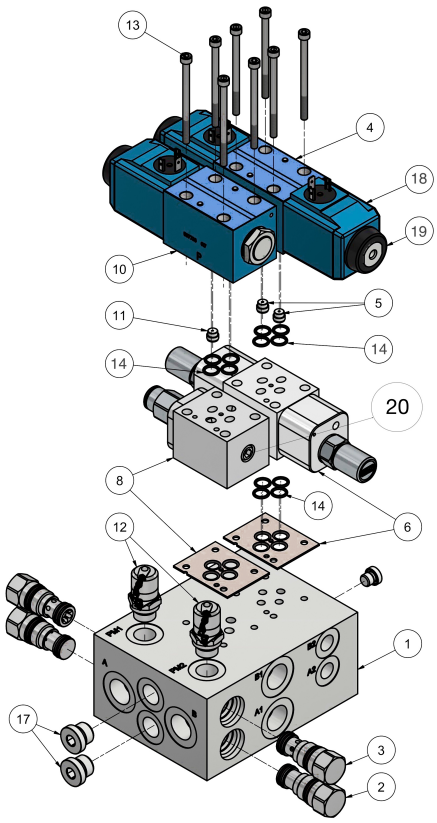

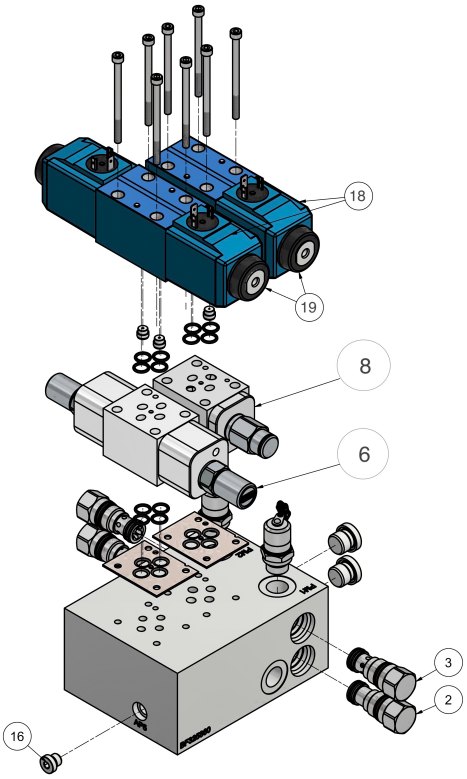

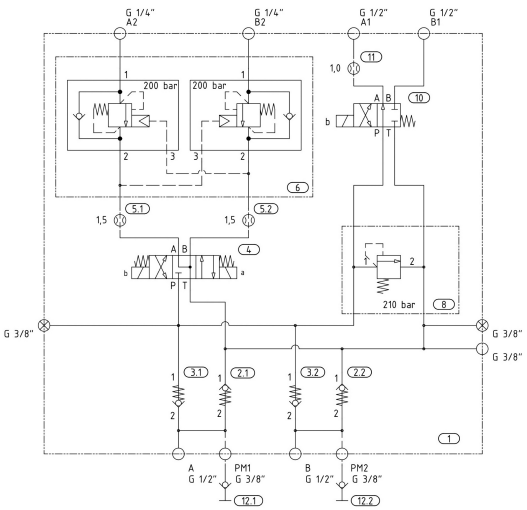

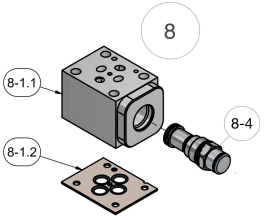

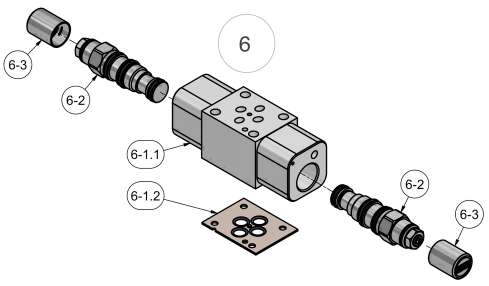

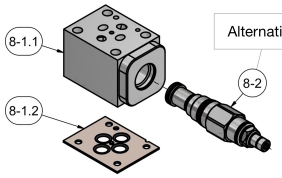

Alternative part

No.	Art. No.	Part	Description	Quantity (pcs.)
	401-220514	Valve set	Complete	1
1	401-220476	Manifold	Not in stock	1
2	401-220322	Check valve		2
3	401-220323	Check valve		2
4	401-220383	Directional valve		1
5	401-220327	Restrictor plug	1,5mm	2
6	401-220479	Tilt holding valve, assembly		1
6-1.1	401-220388	Manifold	Not in stock	1
6-1.2	401-220446	Seal plate & seal kit, including 4 x part nr 14	Not in stock	1
6-2	401-220389	Counterbalance valve	Not in stock	2
6-3	401-220478	Tamper resistant cover	Not in stock	2
8	401-220411	Relief valve, assembly, not adjustable		1
8-1.1	401-220329	Manifold	Not in stock	1
8-1.2	401-220446	Seal plate & seal kit, including 4 x part nr 14	Not in stock	1
8-4	401-220665	Pressure relief valve, not adjustable	Not in stock	1
8-2	401-220477	Alternative part. Pressure relief valve, adjustable		1
10	401-220091	Directional valve		1
11	401-220328	Restrictor plug	1,0mm	1
12	400-220224	Test point		2
13	510-220475	Hexagon socket head cap screw		8
14	402-220652	O-ring NBR90		16
16	401-220448	Plug		1
17	401-220447	Plug		2
18	401-220089	Coil	12VDC, standard for RC	3
18	401-220090	Alt. Coil	24VDC	3
19	510-220483	Retaining nut		3

© 2025 Mecanil Oy Ab

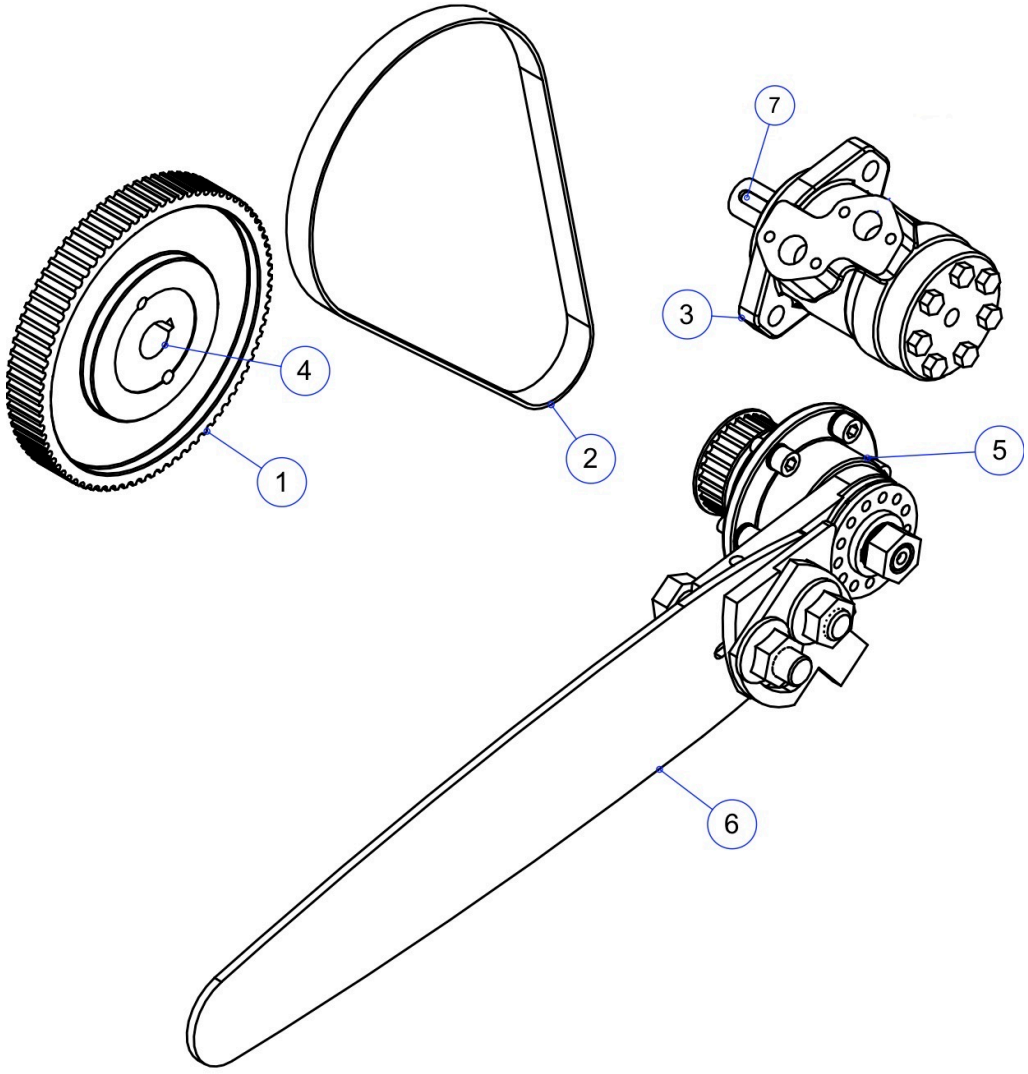
7
3
4
2
5
1
6

No.	Art. No.	Part	Description	Quantity (pcs.)
1	406-220053	Belt wheel large		1
2	406-220051	Drive belt		1
2	406-220052	Alt. Kevlar reinforced belt		
3	401-220083	Saw motor 40cc		1
4	406-220054	Belt wheel centre	Including bolts	1
5	201-220004K	Saw bar attachment complete		1
6	410-220392	Saw bar 18”		1
7	510-220465	Wedge	8x7x32	1

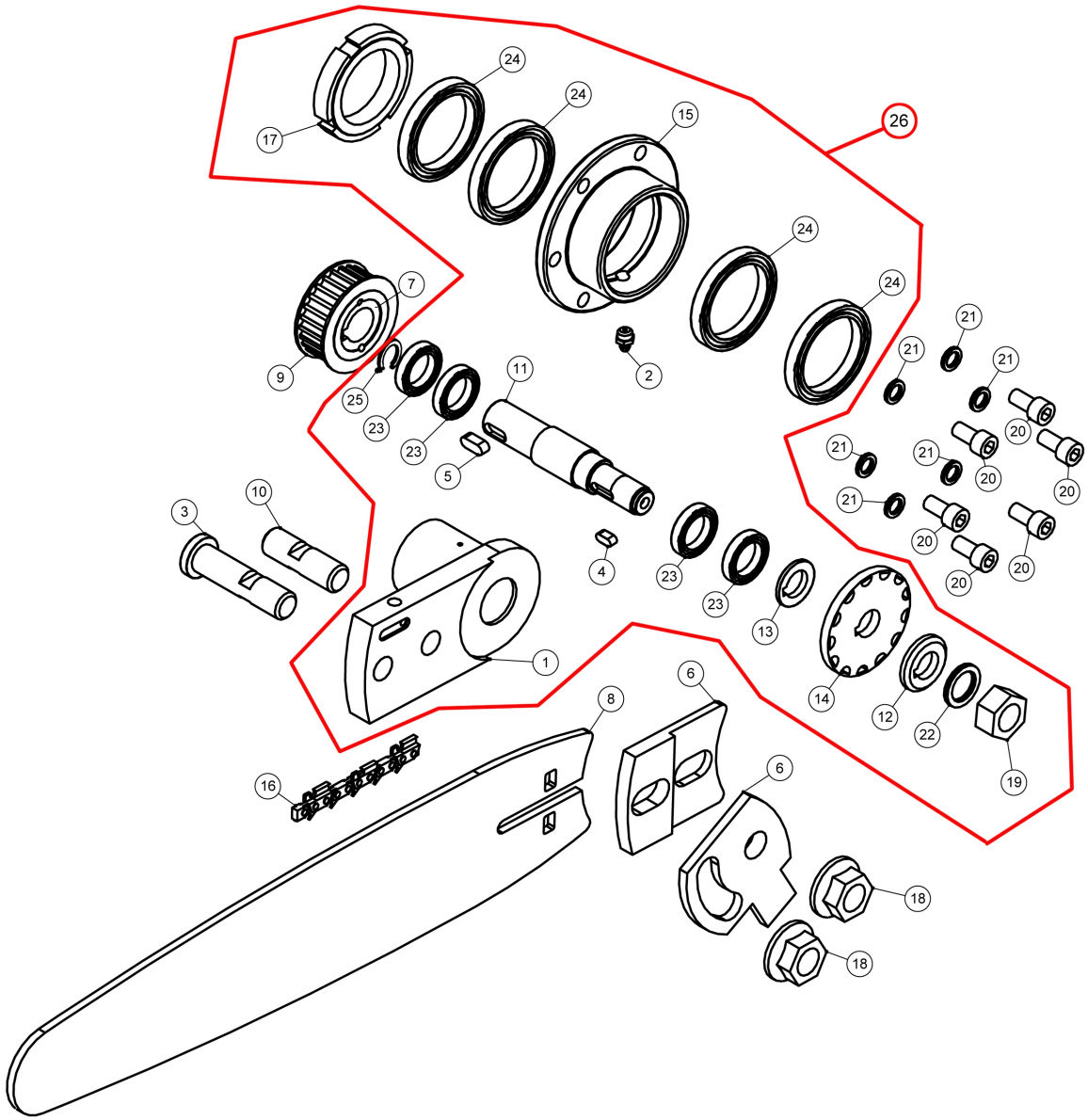
24
24
15
26
17
24
24
7
9
25
23
23
11
5
2
21
21
21
20
20
21
21
20
20
21
20
20
20
3
10
4
23
23
13
1
14
12
22
19
6
8
16
6
18
18

No.	Art. No.	Part	Description	Quantity (pcs.)
1	201-220004	Saw bar attachment		1
2	510-220231	Grease fitting	R1/8”	1
3	201-220027	Saw bar bolt cylinder		1
4	510-220082	Wedge	8x7x15	1
5	510-220012	Wedge	8x7x20	1
6	201-220021	Chain tensioner complete (set)		1
7	406-220056	Belt wheel small centre	Including bolts	1
8	410-220392	Saw bar 18”		1
9	406-220055	Belt wheel small		1
10	201-220028	Saw bar bolt		1
11	201-220024	Saw shaft		1
12	201-220007	Saw washer		1
13	201-220008	Distance washer		1
14	410-220062	Drive wheel		1
15	201-220009	Flange		1
16	410-220023	Saw chain		1
17	510-220276	Nut KM11	KM11 M55x2	1
18	510-220064	Nut	M20	2
19	510-220249	Nut	M20x1,5	1
20	510-220252	Bolt	M10x25	6
21	510-220234	Washer	M10	6
22	510-220238	Washer	Lock M20	1
23	404-220072	Bearing small		4
24	404-220073	Bearing large		4
25	510-220067	Locking washer	37x1,5	1
26	201-220004K	Saw bar attachment complete		1

© 2025 Mecanil Oy Ab

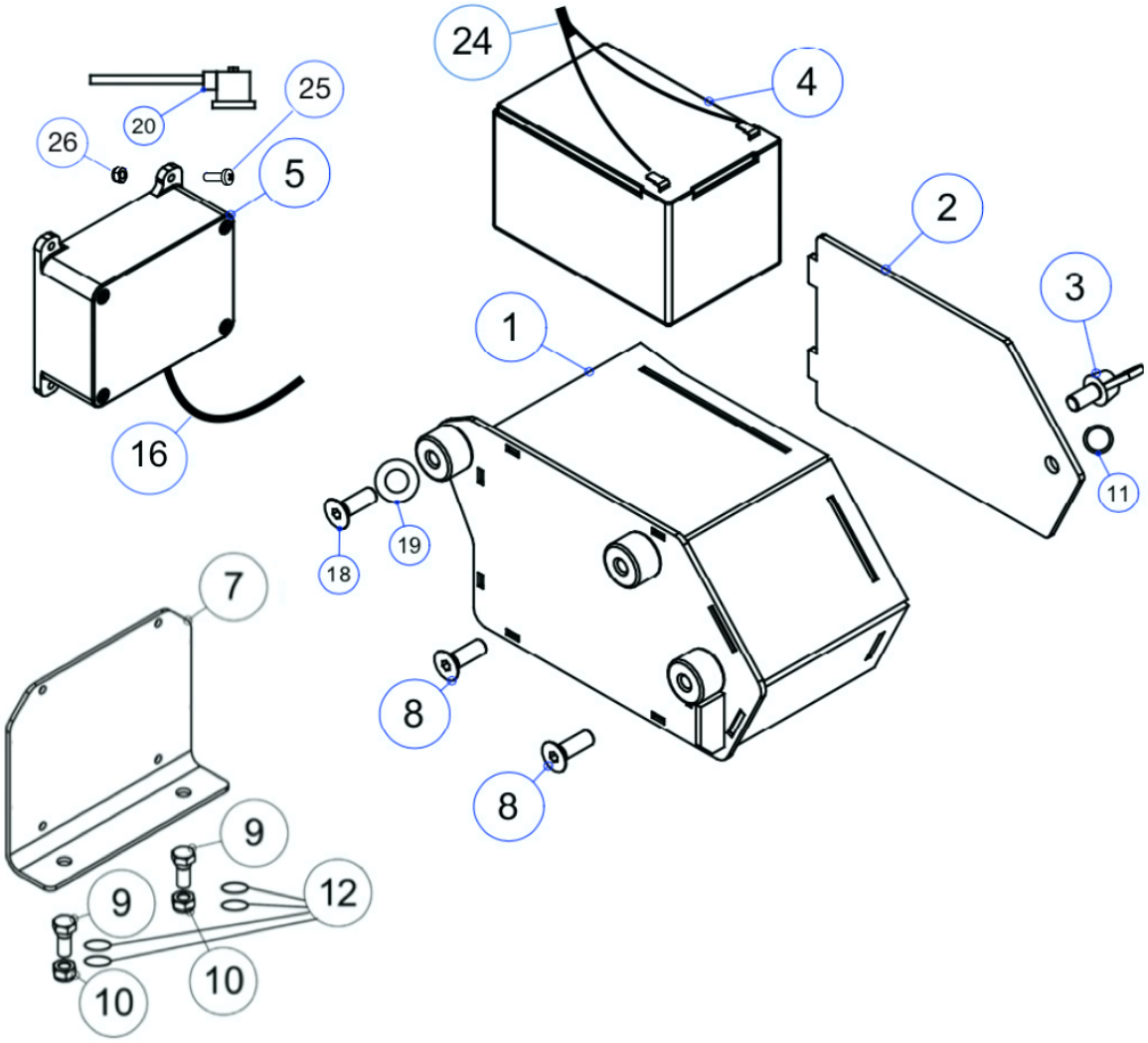

© 2025 Mecanil Oy Ab

No.	Art. No.	Part	Description	Quantity (pcs.)
1	201-220149	Battery box		1
2	201-220076	Lid battery box		1
3	510-220278	Wing bolt	M10x20	1
4	432-220658	Battery 12V LiFePO4 8Ah (96Wh)		2
5	430-220116	Radio control receiver		1
7	201-220075	Receiver plate		1
8	510-220266	Bolt	M10x30	2
9	510-220258	Bolt	M8x25	2
10	510-220243	Nut	Nyloc NM8	2
11	510-220069	Locking ring	9x1,0	1
12	510-220499	Washer	M8 ZN	4
16	431-DC5525M	Power cable		1
18	510-220260	Bolt	M10x35	1
19	510-220234	Lock washer	M10	1
20	431-220429	Alt. 1. Connector	Without collecting unit	3
20	431-220429	Alt. 2. Connector	With collecting unit	4
24	431-DC5525F	Power cable		1
25	510-220257	Bolt	M5x16	4
26	510-220241	Locknut	M5	4

© 2025 Mecanil Oy Ab

RC-T



RC-M

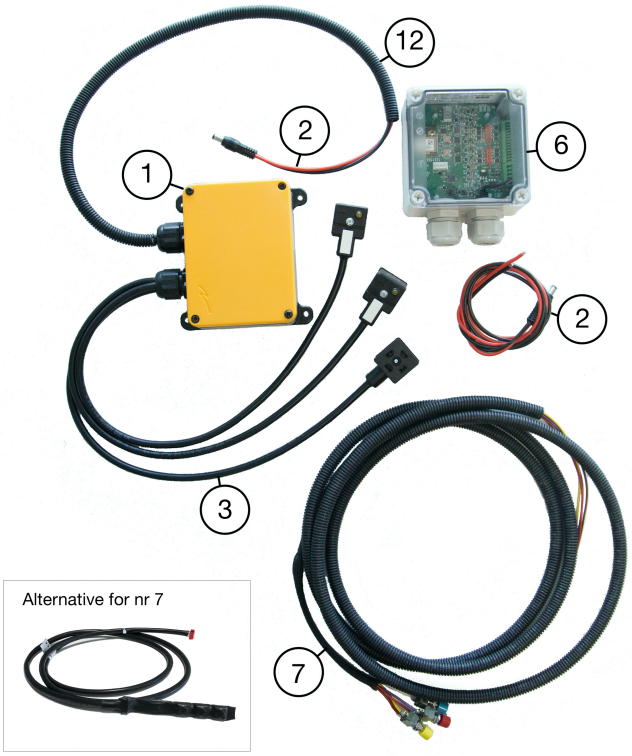

Alternative for nr 7

RC-I

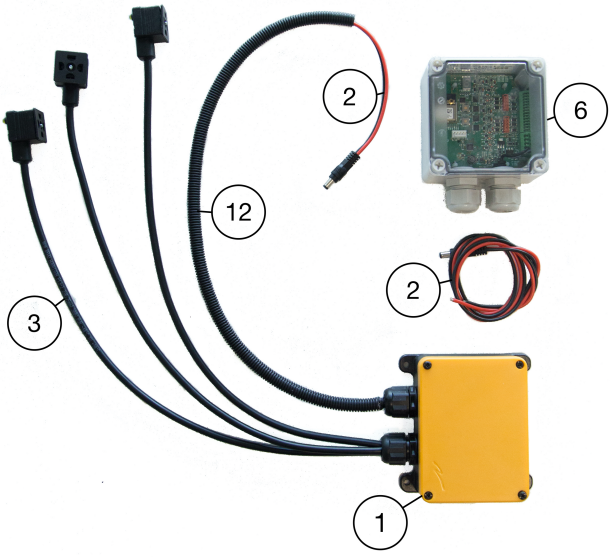

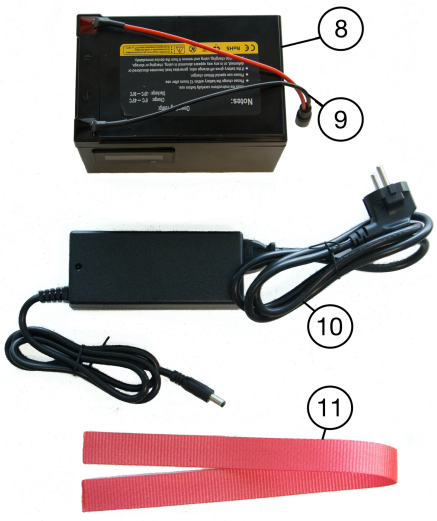

No.	Art. No.	Part	Description	Quantity (pcs.)
	RC-T			
1	430-220116	Radio control receiver		1
2	431-DC5525M	Power cable		1
3	431-220429	Connector		3
4	430-220113	Remote control sender	Handheld	1
5	430-220118	Clip for remote control sender		1
12	431-220661	Cable shield	58cm	1
	RC-M			
1	430-220116	Radio control receiver		1
2	431-DC5525M	Power cable		2
3	431-220429	Connector	(Models with collecting unit have 4 connectors)	3
6	430-220130	IO-transmitter		1
7	430-220101	3 control buttons + cable to transm.		1
7	430-220285	4 control buttons + cable to transm.	for models with collecting unit	1
	430-220145	3 flex buttons	Alternative for nr 7	1
	430-220146	6 flex buttons	Alternative for nr 7	1
12	431-220661	Cable shield	58cm	1
	RC-I			
1	430-220116	Radio control receiver		1
2	431-DC5525M	Power cable		2
3	431-220429	Connector		3
6	430-220130	IO-transmitter		1
12	431-220661	Cable shield	58cm	1
8	432-220658	Battery 12V LiFePO4 8Ah (96Wh)		2
9	431-DC5525F	Power cable		1
10	430-220128US	Battery charger	Only for LifePO4 batteries	1
10	430-220128EU	Battery charger	Only for LifePO4 batteries	1
11	402-220464	Battery strap		1

© 2025 Mecanil Oy Ab

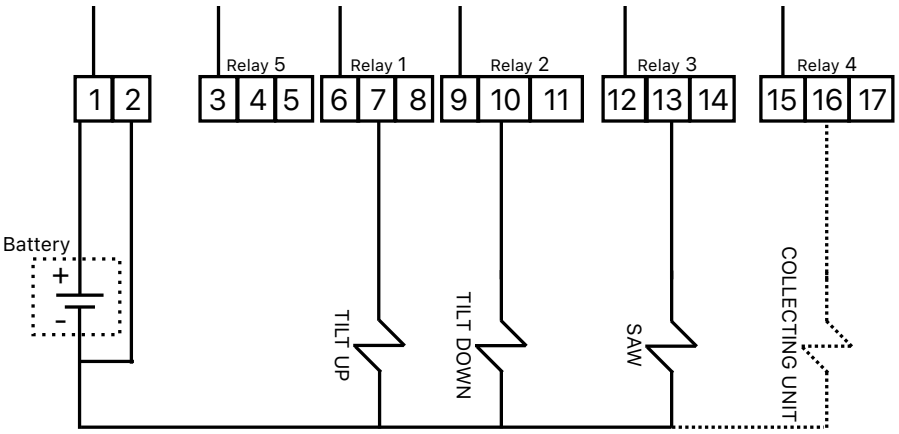
Relay 5
Relay 1
Relay 2
Relay 3
Relay 4
1 2
3 4 5
6 7 8
9 10 11
12 13 14
15 16 17
Battery
+
-
TILT UP
TILT DOWN
SAW
COLLECTING UNIT

