Mecanil Products

# MECANIL SG 160

Spare parts & Technical information

## GENERATION 2

*All rights reserved. Specifications are subject to alteration.*
*Mecanil Oy Ab can not be held responsible for possible type errors or inconsistencies in this spare parts list.*

*01/2025*

Part numbers in this book are links. Select one to open that part in the Grapplesawtrucks.com parts store.

© 2025 Mecanil Oy Ab

SERIAL NUMBER: _____

Information and parts specific for this product:

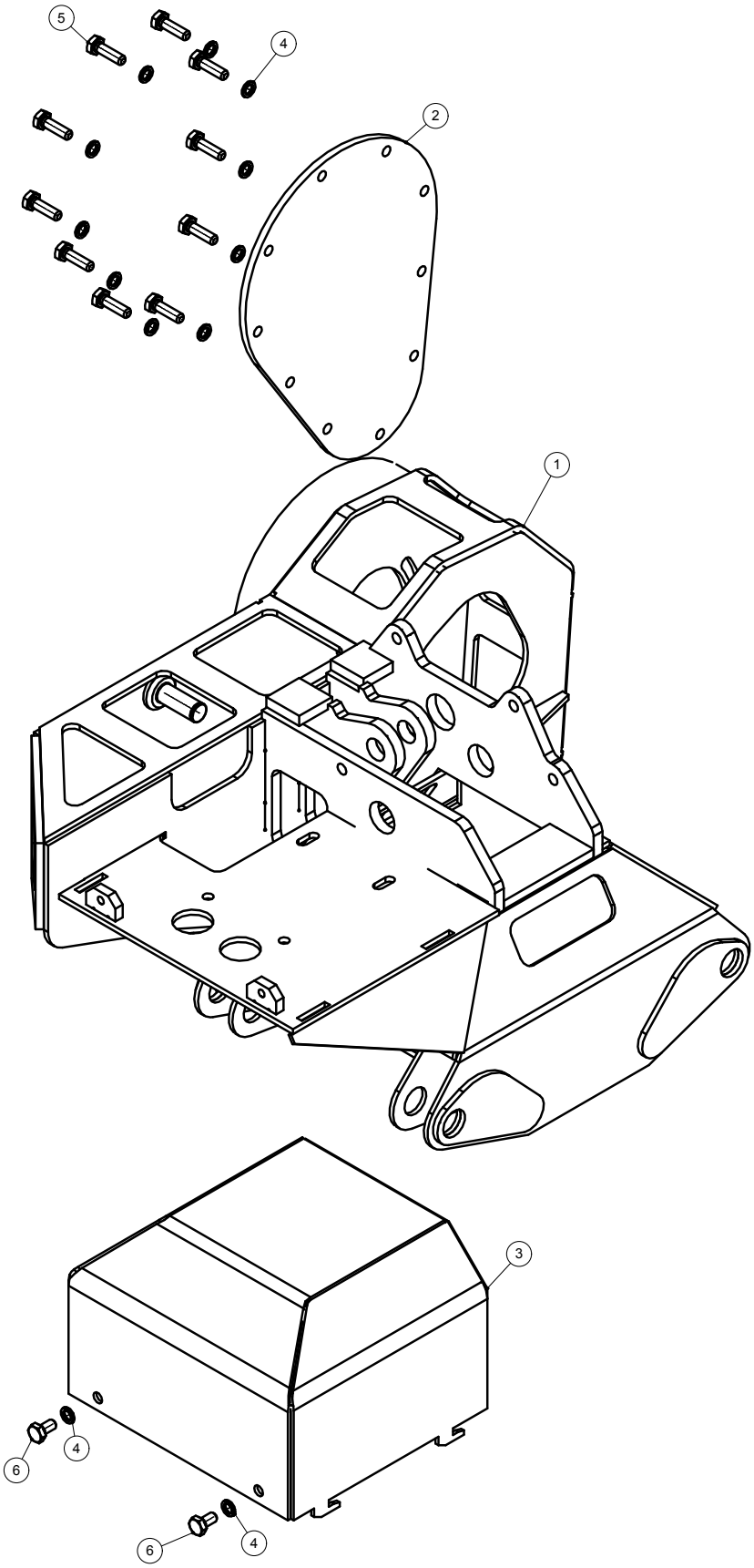


© 2025 Mecanil Oy Ab

| No. | Art. No. | Part | Description | Quantity (pcs.) |
|---|---|---|---|---|
| 1 | 201-220352 | Grapple frame | | 1 |
| 2 | 201-220503 | Lid, drive belt | | 1 |
| 3 | 201-220139 | Lid, valve set | | 1 |
| 4 | 510-220377 | Washer | M10 | 12 |
| 5 | 510-220260 | Bolt | M10x35 8.8 | 10 |
| 6 | 510-220259 | Bolt | M10x20 8.8ZN | 2 |

© 2025 Mecanil Oy Ab

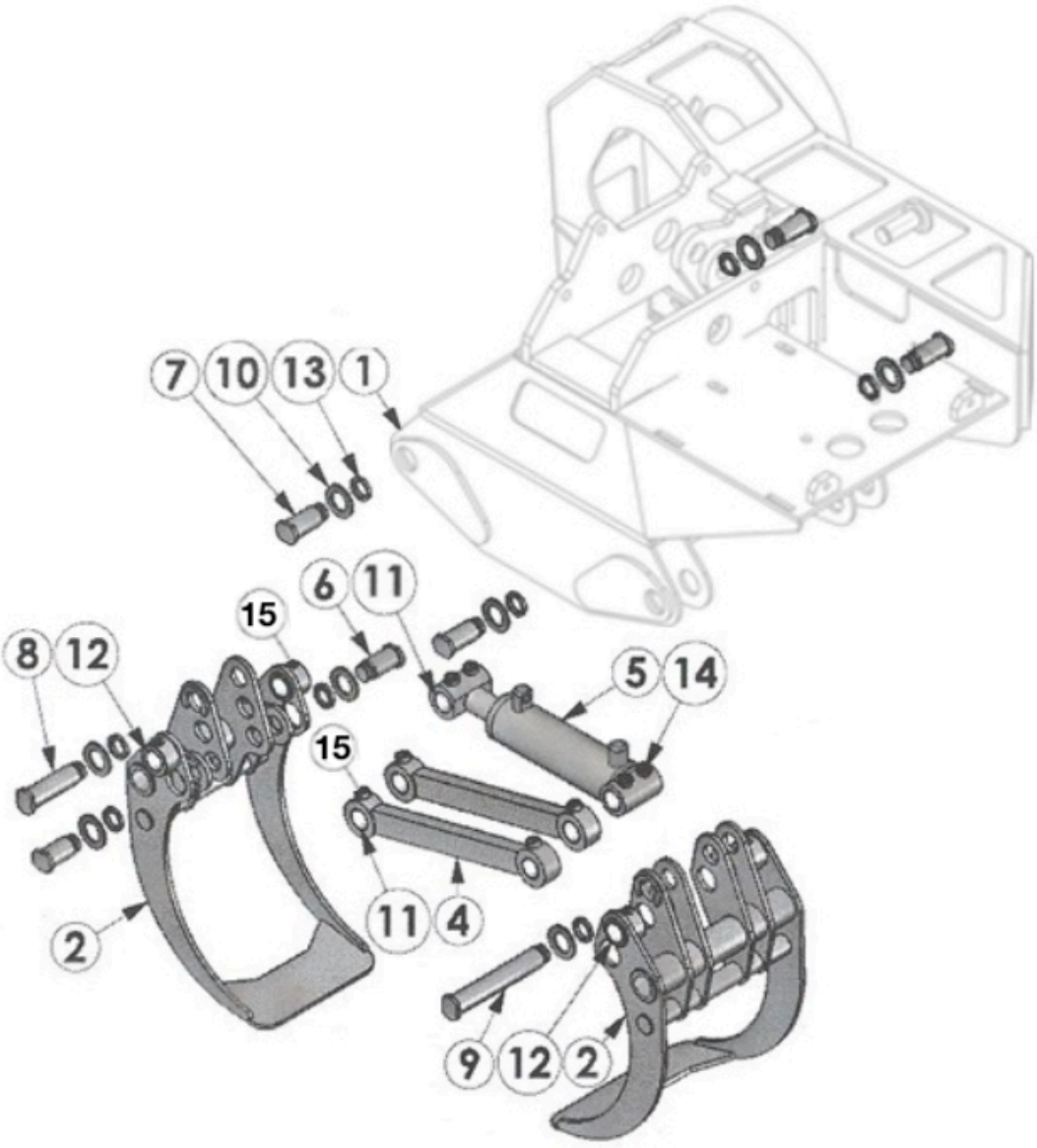
7
10
13
1
6
11
15
8
12
5
14
15
11
4
2
9
12
2

| No. | Art. No. | Part | Description | Quantity (pcs.) |
|---|---|---|---|---|
| **1** | 201-220352 | Grapple frame | | 1 |
| **2** | 201-220111 | Log grapple claws (pair) | Claw alt. 1 | 1 |
| **2** | 201-220112 | Energy grapple claws, open ended (pair) | Claw alt. 2 | 1 |
| **4** | 201-220144 | Guide bar | | 2 |
| **5** | 401-220132 | Grapple cylinder | | 1 |
| | 402-220384 | Seal kit, grapple cylinder | | 1 |
| **6** | 201-220031 | Shaft, guide bar | | 2 |
| **7** | 201-220030 | Shaft, grapple claw | | 4 |
| **8** | 201-220032 | Shaft, grapple cylinder shaft | | 1 |
| **9** | 201-220033 | Shaft, grapple cylinder, guide bar | | 1 |
| **10** | 510-220463 | Washer | | 8 |
| **11** | 404-220466 | Bushing 30x30 | | 8 |
| **12** | 404-220467 | Bushing 30x40 | | 4 |
| **13** | 510-220270 | Axelnut M25x1,5 | | 8 |
| **14** | 510-220228 | Grease fitting | M6 straight | 2 |
| **15** | 510-220230 | Grease fitting | M10x1 straight | 8 |

© 2025 Mecanil Oy Ab

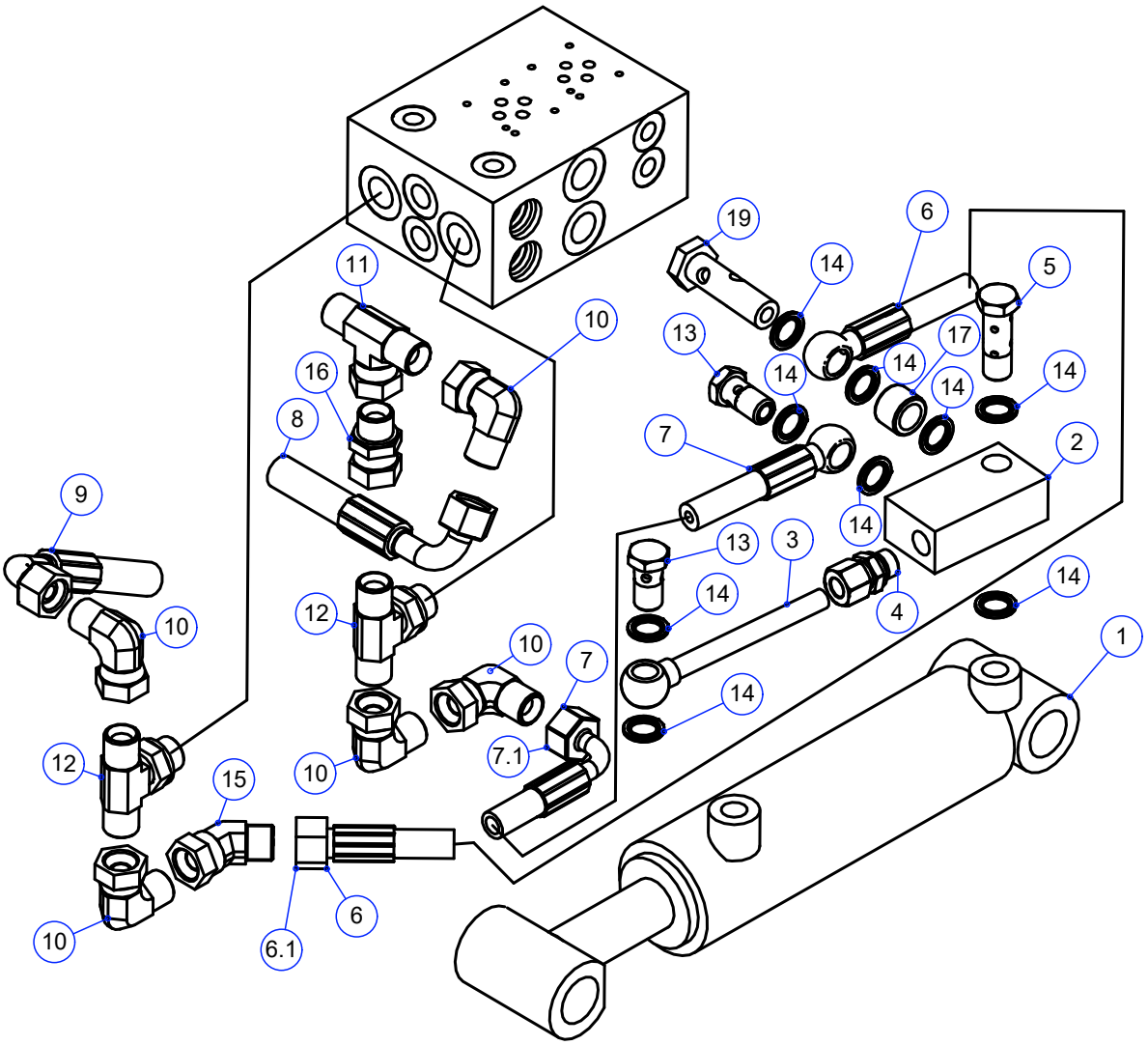
19
6
14
5
11
10
13
17
16
14
14
14
14
8
7
2
9
14
13
3
10
14
4
14
12
10
7
1
14
12
10
7.1
15
10
6
6.1

| No. | Art. No. | Part | Description | Quantity (pcs.) |
|---|---|---|---|---|
| **1** | 401-220132 | Grapple cylinder | | 1 |
| | 401-220132K | Grapple cylinder + Load holding valve assembly | Including parts nr 1 & 400-220356K | |
| | 400-220356K | Holding valve banjo 3/8 assembly | Including parts nr 2,3,4,13 & 14 (2pcs) | |
| **2** | 400-220356 | Load holding valve | Including parts nr 5 & 14 | 1 |
| **3** | 400-220357 | Pipe for holding valve | | 1 |
| **4** | 400-220204K | Pipe fitting | 3/8” | 1 |
| **5** | | Banjo bolt, included with part nr 2 | Not in stock | 1 |
| **6** | 400-220963 | Hydraulic hose | Block (A) - Grapple close | 1 |
| **6.1** | 400-220985 | Alt. Hydraulic hose (without holding valve) | A | 1 |
| **7** | 400-220964 | Hydraulic hose | Block (B) - Grapple open | 1 |
| **7.1** | 400-220986 | Alt. Hydraulic hose (without holding valve) | B | 1 |
| **8** | 400-220966 | Hose | B - Rotator | 1 |
| **9** | 400-220965 | Hose | A - Rotator | 1 |
| **10** | 400-220158 | Angle fitting 90 deg. | R1/2” | 5 |
| **11** | 400-220176 | T-fitting | 1/2” | 1 |
| **12** | 400-220151 | T-fitting (adjustable) | 1/2” | 2 |
| **13** | 400-220184 | Banjo bolt | 3/8” | 3 |
| **14** | 400-220178 | Self-centering metal seal | 3/8” | 8 |
| **15** | 400-220161 | Angle fitting 45 deg. | | 1 |
| **16** | 400-220198 | Fitting | | 1 |
| **17** | 400-250123 | Fitting for banjobolt 3/8” | | 1 |
| **19** | 400-220187 | Crossover banjo bolt | 3/8” | 1 |

© 2025 Mecanil Oy Ab

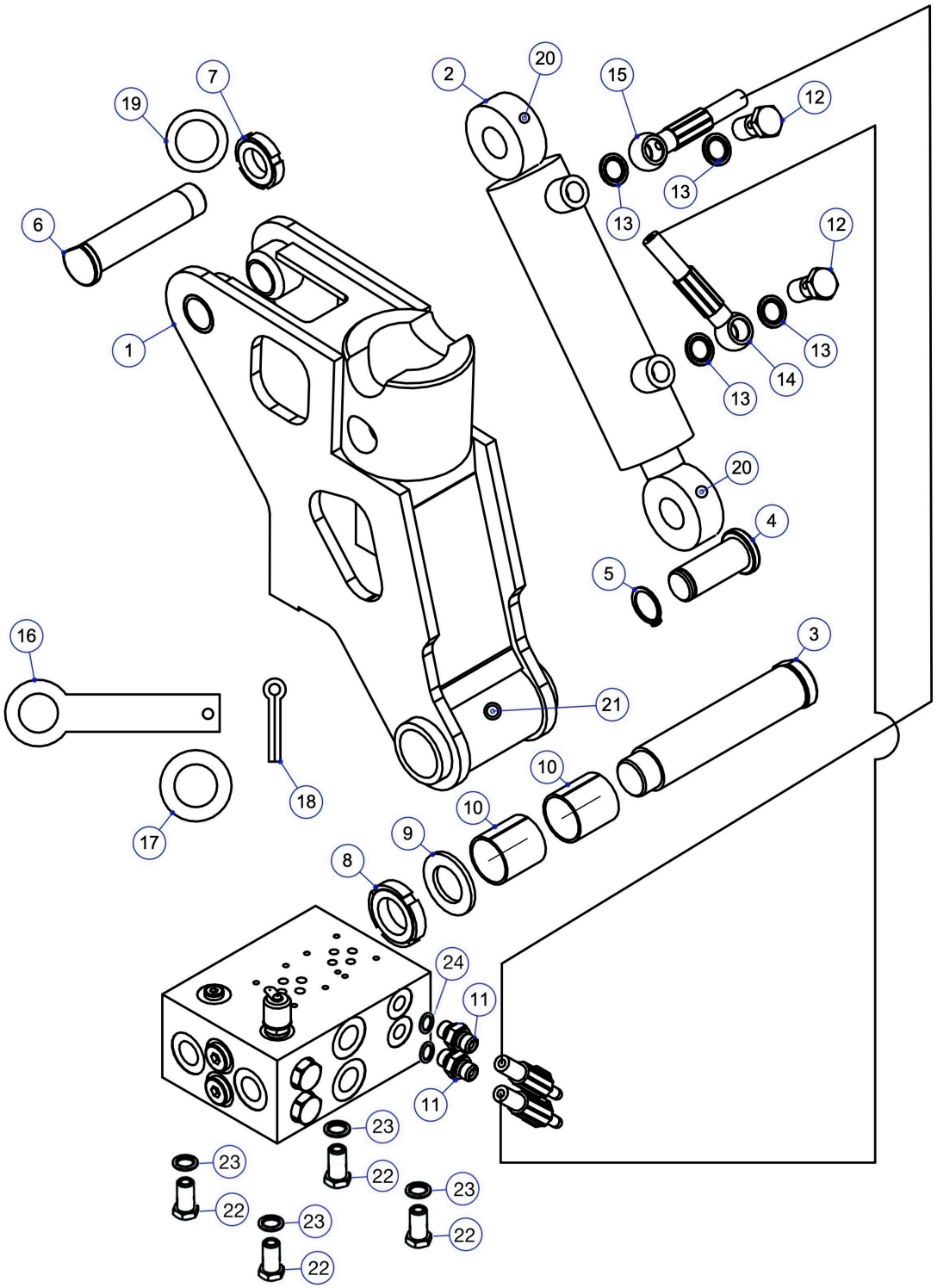


© 2025 Mecanil Oy Ab

| No. | Art. No. | Part | Description | Quantity (pcs.) |
|---|---|---|---|---|
| 1 | 201-220348 | Tilt frame | | 1 |
| 2 | 401-220134 | Tilt cylinder | | 1 |
| | 402-220304 | Seal kit, tilt cylinder SG160G2 | | 1 |
| 3 | 201-220094 | Shaft for tilt unit | | 1 |
| 4 | 201-220096 | Pin for tilt cylinder (shaft) | | 1 |
| 5 | 510-220349 | Lock ring | | 1 |
| 6 | 201-220095 | Pin for tilt cylinder (pipe) | | 1 |
| 7 | 510-220270 | Nut KM5 | KM5 | 1 |
| 8 | 510-220271 | Nut KM6 | KM6 | 1 |
| 9 | 510-220480 | Washer | 35x45x2,5 | 1 |
| 10 | 404-220048 | Bushing | 35x39x40 | 2 |
| 11 | 400-220169 | Double fitting | BSP | 2 |
| 12 | 400-220184 | Banjo bolt (BSP) | 3/8” | 2 |
| 13 | 400-220178 | Self-centering metal seal | 3/8” | 2 |
| 14 | 400-220958 | Hydraulic hose | Block - Tilt cylinder (shaft) | 1 |
| 15 | 400-220959 | Hydraulic hose | Block - Tilt cylinder (pipe) | 1 |
| 16 | 201-220441 | Rotator pin | | 1 |
| 17 | 510-220239 | Washer | M30 | 1 |
| 18 | 510-220442 | Bailhead fastener | 8mm | 1 |
| 19 | 510-990030 | Washer | M24/25 | 1 |
| 20 | 510-220229 | Grease fitting | 90 deg. Zink M6x1 | 2 |
| 21 | 510-220231 | Grease fitting | Zink R1/8” | 1 |
| 22 | 510-220259 | Allen screw | M10x20 | 4 |
| 23 | 510-220234 | Lockwasher | M10 | 4 |
| 24 | 400-220177 | Self-centering metal seal | 1/4” | 2 |

© 2025 Mecanil Oy Ab

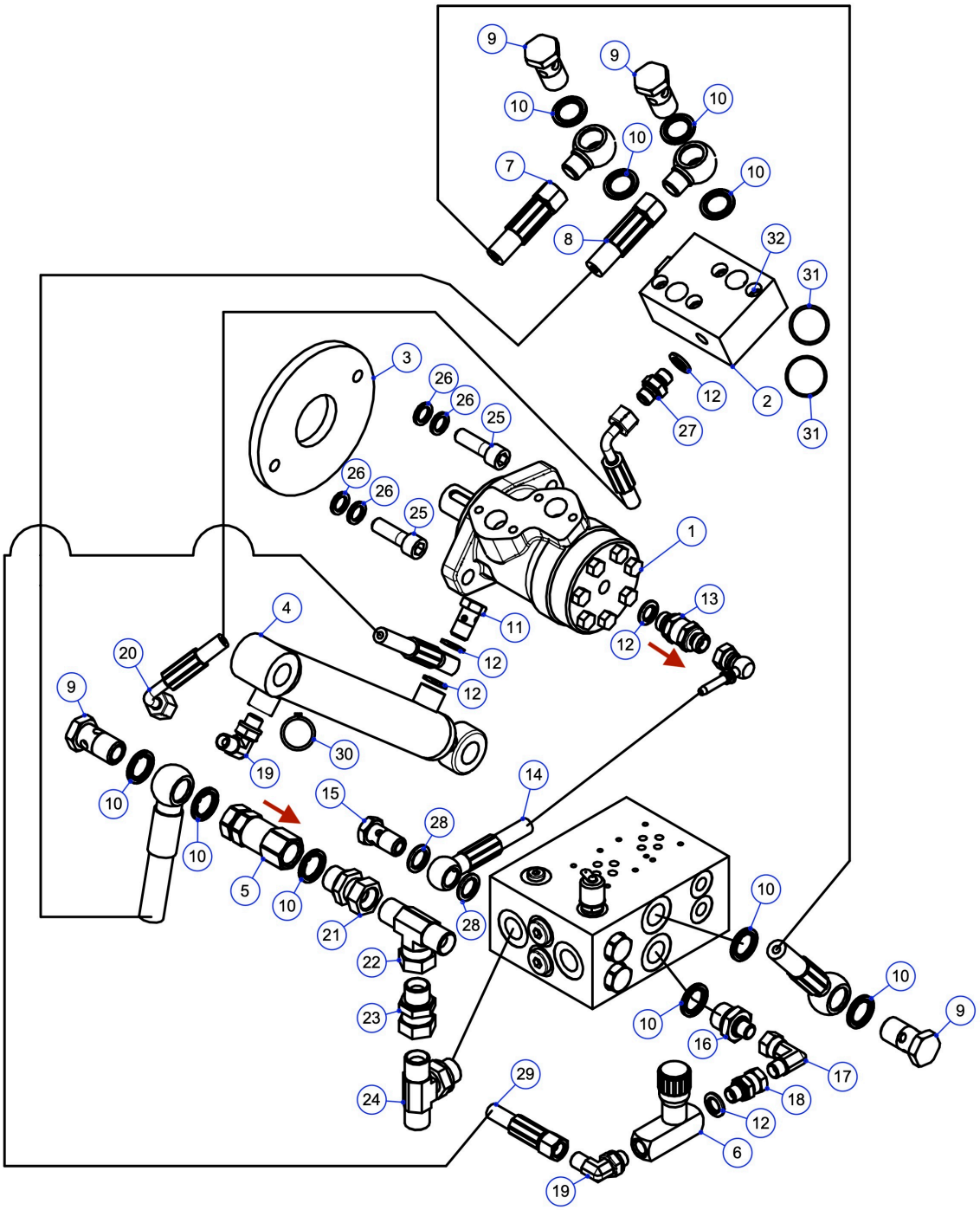
9
9
10
10
10
7
10
8
32
31
3
26
26
25
12
2
27
31
26
26
25
1
13
4
11
12
12
20
9
30
19
14
15
28
10
10
5
10
21
28
22
10
23
10
16
17
10
9
24
29
18
12
6
19

| No. | Art. No. | Part | Description | Quantity (pcs.) |
|---|---|---|---|---|
| 1 | 401-220081 | Saw motor (32cc) | | 1 |
| 2 | 401-220086 | Saw motor block | | 1 |
| 3 | 201-220014 | Plate | | 1 |
| 4 | 401-220135 | Saw cylinder | | 1 |
| | 402-220297 | Seal kit, saw cylinder | | 1 |
| 5 | 400-220218 | Check valve | 1/2” | 1 |
| 6 | 400-220221 | Adjustable check valve | | 1 |
| 7 | 400-220955 | Hydraulic hose | Block B1 - saw motor block | 1 |
| 8 | 400-220956 | Hydraulic hose | Saw motor block - check valve | 1 |
| 9 | 400-220185 | Banjo bolt | 1/2” | 4 |
| 10 | 400-220179 | Self-centering metal seal | 1/2” | 10 |
| 11 | 400-220183 | Bajno bolt | 3/8” | 1 |
| 12 | 400-220177 | Self-centering metal seal | 1/4” | 3 |
| 13 | 400-220217 | Check valve | 1/4” | 1 |
| 14 | 400-220953 | FittingHydraulic hose | Saw motor spill - block | 1 |
| 15 | 400-220184 | BSP banjo bolt | 3/8” | 1 |
| 16 | 400-220166 | Double fitting | BSP | 1 |
| 17 | 400-220156 | Angle fitting 90deg. | R1/4” | 1 |
| 18 | 400-220196 | Double fitting | BSP 1/4” | 1 |
| 19 | 400-220154 | Adjustable angle fitting 90deg. | 1/4” | 2 |
| 20 | 400-220954 | Hydraulic hose | | 1 |
| 21 | 400-220198 | Double fitting | 1/2” | 1 |
| 22 | 400-220176 | T-fitting | 1/2” | 1 |
| 23 | 400-220198 | Double fitting | 1/2” | 1 |
| 24 | 400-220151 | Adjustable T-fitting | 1/2” | 1 |
| 25 | 510-220255 | Bolt 12x40 | M12x40 12.9 | 2 |
| 26 | 510-220235 | Washer | Lock M12 | 4 |
| 27 | 400-220169 | Double fitting | BSP 1/4” | 1 |
| 28 | 400-220178 | Self-centering metal seal | 3/8” | 1 |
| 29 | 400-220957 | Hydraulic hose | Adj. valve - saw cyl. shaft | 1 |
| 30 | 510-220065 | Locking ring, saw cylinder | 20x1,2 | 1 |
| 31 | 402-220509 | O-ring, saw motor valve | | 2 |
| 32 | 510-220251 | Bolt | M8x40 12.9 | 4 |

© 2025 Mecanil Oy Ab

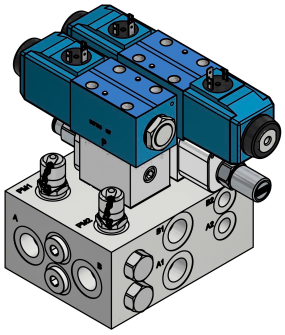

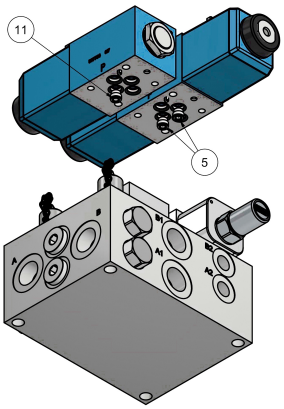
11
5

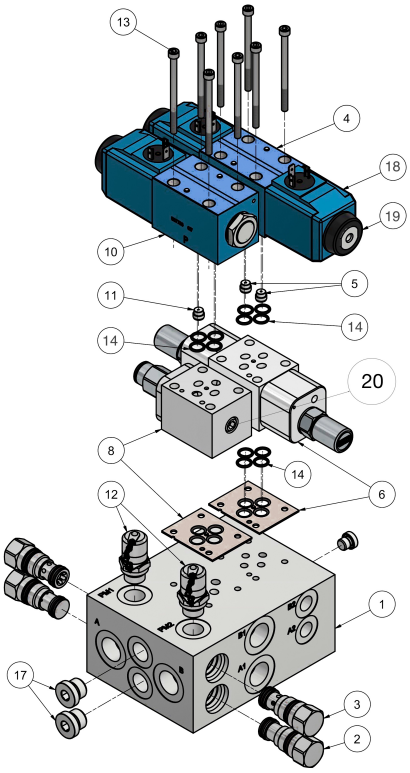
13
4
18
19
10
11
5
14
14
20
8
14
6
12
1
17
3
2

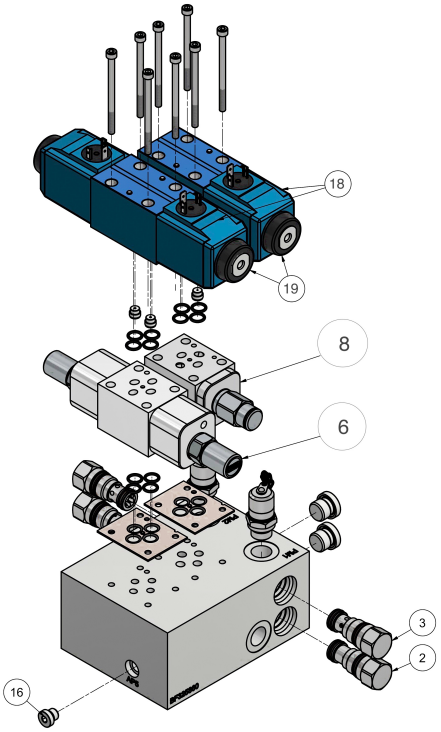
18
19
8
6
3
2
16

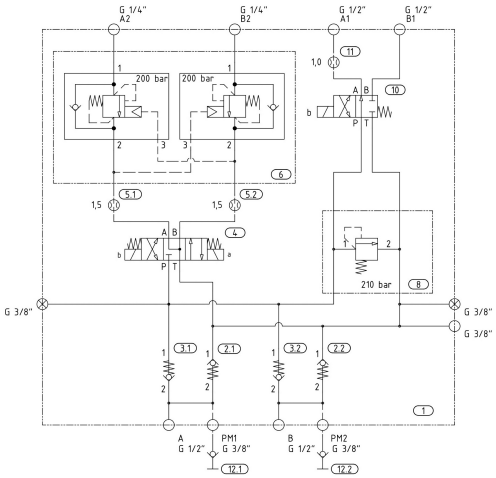
G 1/4" A2
G 1/4" B2
G 1/2" A1
G 1/2" B1
200 bar
200 bar
210 bar
G 3/8"
G 3/8"
G 3/8"
A G 1/2"
PM1 G 3/8"
B G 1/2"
PM2 G 3/8"

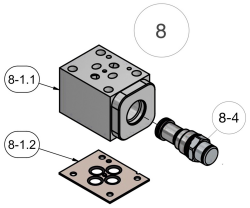
8
8-1.1
8-4
8-1.2

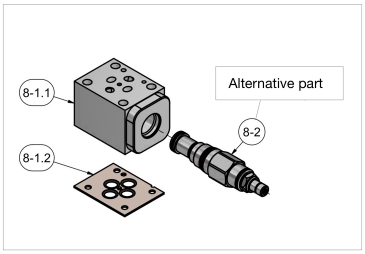
Alternative part
8-1.1
8-2
8-1.2

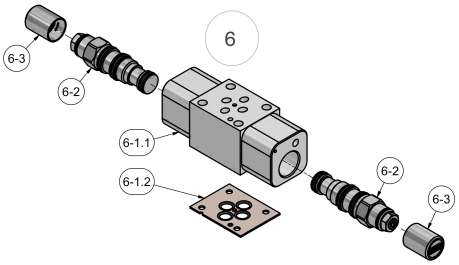
6
6-3
6-2
6-1.1
6-2
6-1.2
6-3

| No. | Art. No. | Part | Description | Quantity (pcs.) |
|---|---|---|---|---|
| | 401-220514 | Valve set | Complete | 1 |
| 1 | 401-220476 | Manifold | Not in stock | 1 |
| 2 | 401-220322 | Check valve | | 2 |
| 3 | 401-220323 | Check valve | | 2 |
| 4 | 401-220383 | Directional valve, tilt | | 1 |
| 5 | 401-220327 | Restrictor plug | | 2 |
| 6 | 401-220479 | Tilt holding valve, assembly | | 1 |
| 6-1.1 | 401-220388 | Manifold | Not in stock | 1 |
| 6-1.2 | 401-220446 | Seal plate & seal kit, including 4 x part nr 14 | Not in stock | 1 |
| 6-2 | 401-220389 | Counterbalance valve | Not in stock | 2 |
| 6-3 | 401-220478 | Tamper resistant cover | Not in stock | 2 |
| 8 | 401-220411 | Relief valve, assembly, not adjustable | | 1 |
| 8-1.1 | 401-220329 | Manifold | Not in stock | 1 |
| 8-1.2 | 401-220446 | Seal plate & seal kit, including 4 x part nr 14 | Not in stock | 1 |
| 8-4 | 401-220665 | Pressure relief valve, not adjustable | Not in stock | 1 |
| 8-2 | 401-220477 | Alternative part. Pressure relief valve, adjustable | | 1 |
| 10 | 401-220091 | Directional valve, saw | | 1 |
| 11 | 401-220328 | Restrictor plug | | 1 |
| 12 | 400-220224 | Pressure measurement point | | 2 |
| 13 | 510-220475 | Hexagon socket head cap screw | | 8 |
| 14 | 402-220652 | O-ring NBR90 | | 16 |
| 16 | 401-220448 | Plug | | 1 |
| 17 | 401-220447 | Plug | | 2 |
| 18 | 401-220089 | Coil | 12VDC, standard for RC | 3 |
| 18 | 401-220090 | Alternative coil | 24VDC | 3 |
| 19 | 510-220483 | Retaining nut | | 3 |

© 2025 Mecanil Oy Ab

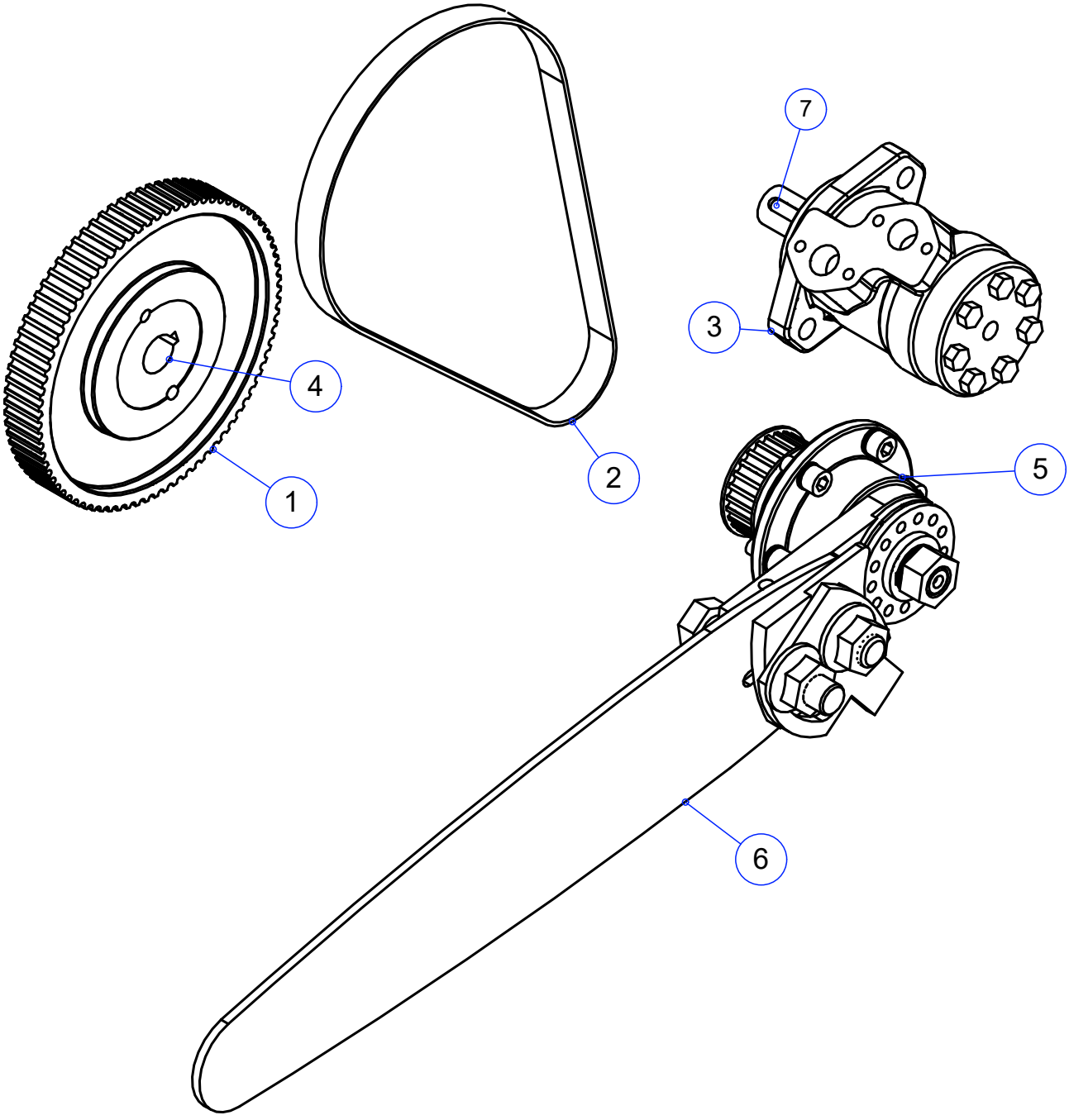
7
3
4
2
1
5
6

| No. | Art. No. | Part | Description | Quantity (pcs.) |
|---|---|---|---|---|
| 1 | 406-220053 | Belt wheel large | | 1 |
| 2 | 406-220050 | Drive belt | | 1 |
| 2 | 406-220484 | Alt. Kevlar reinforced belt | | 1 |
| 3 | 401-220081 | Saw motor 32cc | | 1 |
| 4 | 406-220054 | Belt wheel centre | Including bolts | 1 |
| 5 | 201-220141K | Saw bar attachment complete | | 1 |
| 6 | 410-220391 | Mecanil Pro Saw bar 16” | 48 cm | 1 |
| 7 | 510-220465 | Wedge | 8x7x32 | 1 |

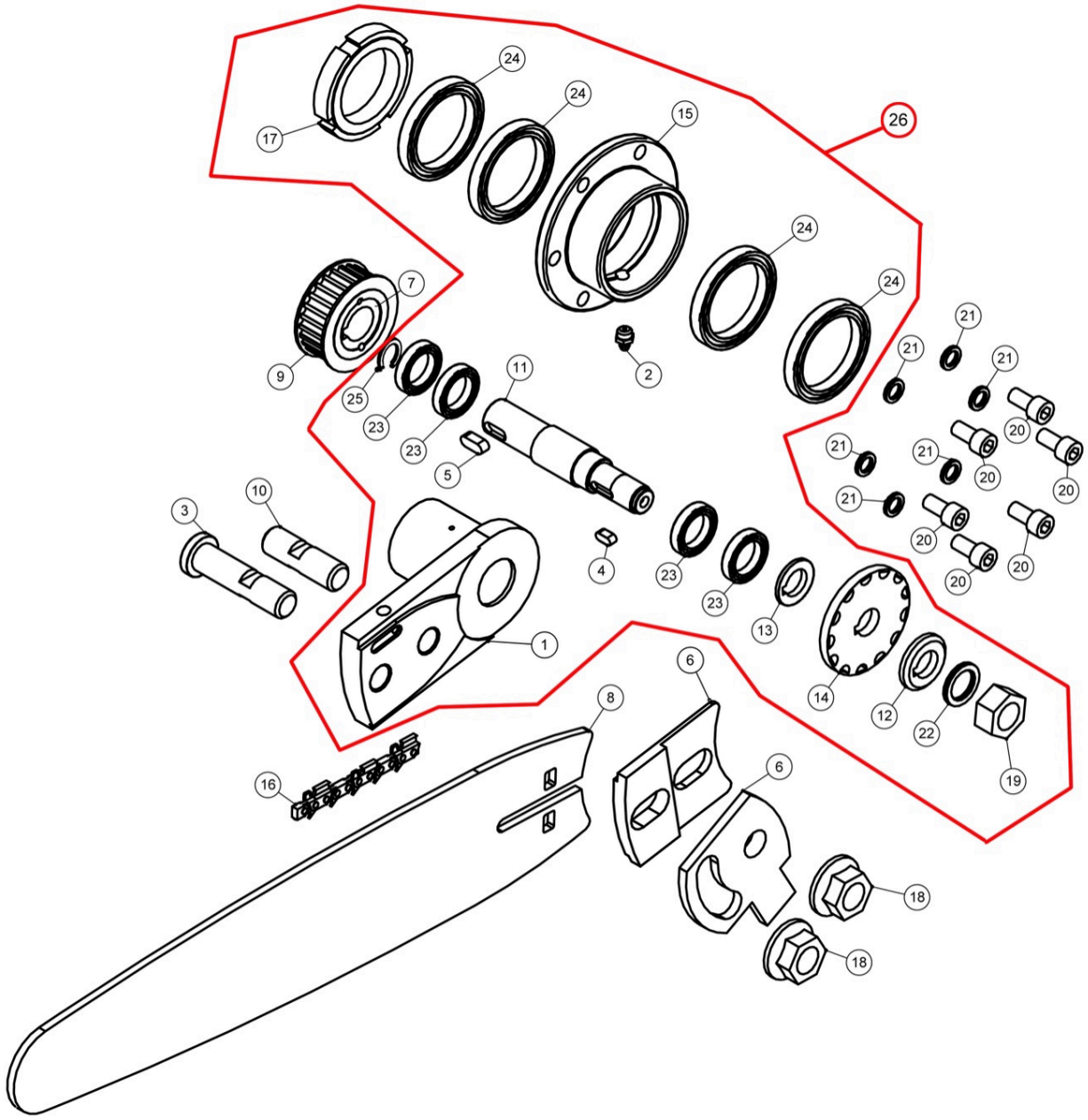
26
24
24
15
17
24
24
7
9
25
23
23
11
5
2
21
21
21
21
20
20
20
21
21
20
20
20
20
20
3
10
4
23
23
13
1
14
12
22
19
6
8
6
16
18
18

| No. | Art. No. | Part | Description | Quantity (pcs.) |
|---|---|---|---|---|
| 1 | 201-220141 | Saw bar attachment | | 1 |
| 2 | 510-220231 | Grease fitting | R1/8” | 1 |
| 3 | 201-220027 | Saw bar bolt cylinder | | 1 |
| 4 | 510-220082 | Wedge | 8x7x15 | 1 |
| 5 | 510-220012 | Wedge | 8x7x20 | 1 |
| 6 | 201-220071 | Chain tensioner complete (set) | | 1 |
| 7 | 406-220056 | Belt wheel small centre | Including bolts | 1 |
| 8 | 410-220391 | Mecanil Pro Saw bar 16” | 48 cm | 1 |
| 9 | 406-220055 | Belt wheel small | | 1 |
| 10 | 201-220028 | Saw bar bolt | | 1 |
| 11 | 201-220024 | Saw shaft | | 1 |
| 12 | 201-220007 | Saw washer | | 1 |
| 13 | 201-220008 | Distance washer | | 1 |
| 14 | 410-220063 | Drive wheel | | 1 |
| 15 | 201-220009 | Saw bar part | | 1 |
| 16 | 410-220022 | Saw chain (16”) | | 1 |
| 17 | 510-220276 | Nut KM11 | KM11 M55x2 | 1 |
| 18 | 510-220064 | Nut | M20 | 2 |
| 19 | 510-220249 | Nut | M20x1,5 | 1 |
| 20 | 510-220252 | Bolt | M10x25 | 6 |
| 21 | 510-220234 | Washer | M10 | 6 |
| 22 | 510-220238 | Washer | Lock M20 | 1 |
| 23 | 404-220072 | Bearing small | | 4 |
| 24 | 404-220073 | Bearing large | | 4 |
| 25 | 510-220067 | Locking washer | 37x1,5 | 1 |
| 26 | 201-220141K | Saw bar attachment complete | | 1 |

© 2025 Mecanil Oy Ab

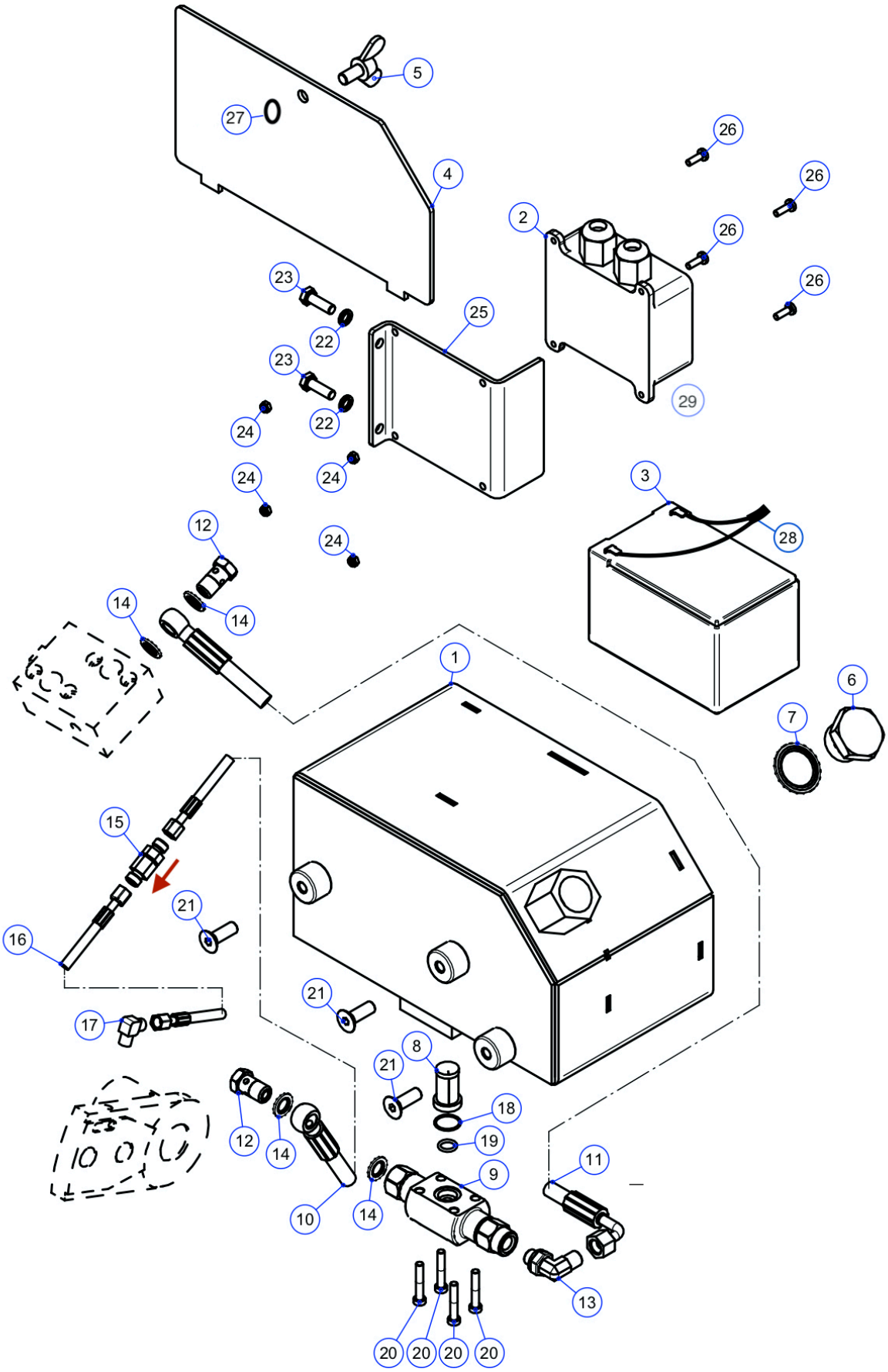
5
27
4
26
26
2
26
26
23
25
22
23
22
29
24
24
24
24
3
28
12
14
14
1
6
7
15
21
16
21
17
8
21
18
19
12
14
11
9
10
14
13
20
20
20
20

| No. | Art. No. | Part | Description | Quantity (pcs.) |
|---|---|---|---|---|
| 1 | 201-220366 | RC-box | | 1 |
| 2 | 430-220116 | Radio control receiver | (Power cable, part nr 29) | 1 |
| 3 | 432-220127 | Battery 12V LiFePO4 (12Ah, 144Wh) | | 2 |
| 4 | 201-220367 | Lid for RC-box | | 1 |
| 5 | 510-220278 | Wing Bolt | M10x20 | 1 |
| 6 | 400-220194 | Chain oil tank cap | | 1 |
| 7 | 400-220182 | Self centering metal seal | 1” | 1 |
| 8 | 400-220282 | Debris filter | | 1 |
| 9 | 400-220223 | Pump for chain oil | | 1 |
| 10 | 400-220976 | Hydraulic hose | | 1 |
| 11 | 400-220975 | Hydraulic hose | | 1 |
| 12 | 400-220183 | Banjo bolt | 1/4” | 2 |
| 13 | 400-220154 | Adjustable angle fitting 90deg. | 1/4” | 1 |
| 14 | 400-220177 | Self centering metal seal | 1/4” | 4 |
| 15 | 400-220219 | Check valve | 1/4” | 1 |
| 16 | 400-220937 | Hydraulic hose | | 1 |
| 17 | 400-220216 | Fitting | | 1 |
| 18 | 402-220315 | O-ring | 19,1mm x 1,6mm | 1 |
| 19 | 402-220316 | O-ring | 11,3mm x 2,4mm | 1 |
| 20 | 510-220482 | Bolt | M6x35 12.9 | 4 |
| 21 | 510-220266 | Bolt | M10x30 | 3 |
| 22 | 510-220233 | Lockwasher | M8 | 2 |
| 23 | 510-220258 | Bolt | M8x25 | 2 |
| 24 | 510-220241 | Locknut | M5 | 4 |
| 25 | 201-220481 | RC attachment plate | | 1 |
| 26 | 510-220257 | Bolt | M5x16 | 4 |
| 27 | 510-220069 | Locking ring | 9x1,0 | 1 |
| 28 | 431-DC5525F | Power cable | | 1 |
| 29 | 431-DC5525M | Power cable | | 1 |

© 2025 Mecanil Oy Ab

## RC-T




## RC-M

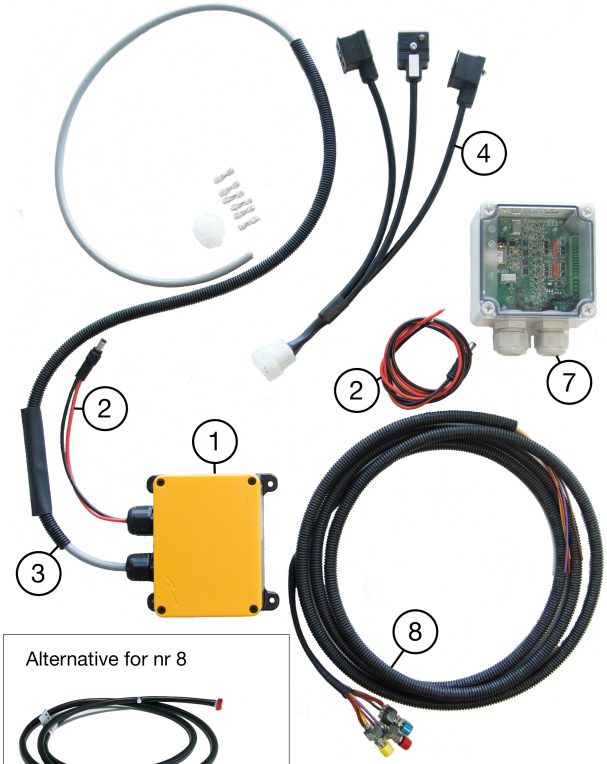


Alternative for nr 8



## RC-I

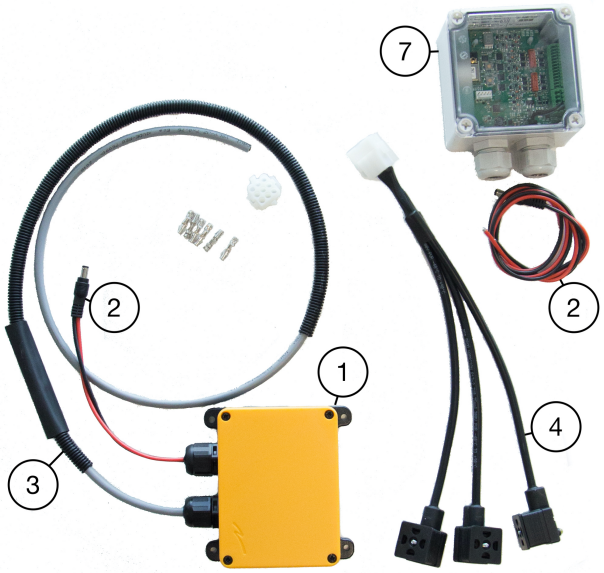


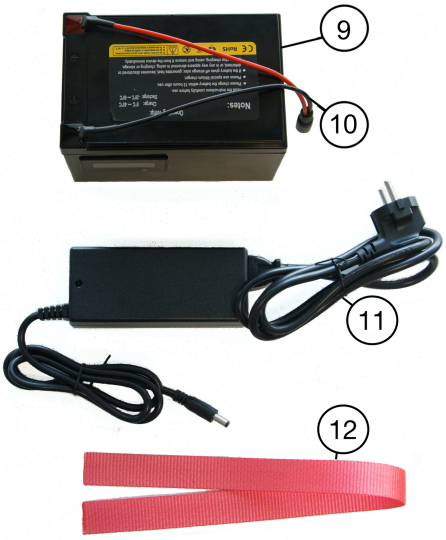

| No. | Art. No. | Part | Description | Quantity (pcs.) |
|---|---|---|---|---|
| | RC-T | | | |
| 1 | 430-220116 | Radio control receiver | | 1 |
| 2 | 431-DC5525M | Power cable | | 1 |
| 3 | 431-220657 | Wire harness (receiver) | | 1 |
| 4 | 431-220656 | Connector harness | | 1 |
| 5 | 430-220113 | Remote control sender (RC-T) | Handheld | 1 |
| 6 | 430-220118 | Clip for remote control sender | | 1 |
| | RC-M | | | |
| 1 | 430-220116 | Radio control receiver | | 1 |
| 2 | 431-DC5525M | Power cable | | 2 |
| 3 | 431-220657 | Wire harness (receiver) | | 1 |
| 4 | 431-220656 | Connector harness | | 1 |
| 7 | 430-220130 | IO-transmitter | | 1 |
| 8 | 430-220101 | 3 control buttons + cable to transm. | | 1 |
| 8 | 430-220285 | Alt. With 4 control buttons for models with collecting unit | | 1 |
| | 430-220145 | 3 flex buttons | Alternative for nr 8 | 1 |
| | 430-220146 | 6 flex buttons | Alternative for nr 8 | 1 |
| | RC-I | | | |
| 1 | 430-220116 | Radio control receiver | | 1 |
| 2 | 431-DC5525M | Power cable | | 2 |
| 3 | 431-220657 | Wire harness (receiver) | | 1 |
| 4 | 431-220656 | Connector harness | | 1 |
| 7 | 430-220130 | IO-transmitter | | 1 |
| | | | | |
| 9 | 432-220658 | Battery 12V LiFePO4 8Ah | | 2 |
| 10 | 431-DC5525F | Power cable | | 1 |
| 11 | 430-220128EU | Battery charger | Only for LifePO4 batteries | 1 |
| 11 | 430-220128US | Battery charger | Only for LifePO4 batteries | 1 |
| 12 | 501-220464 | Battery strap | | 1 |

© 2025 Mecanil Oy Ab

Electrical schematic for Mecanil SG-Series G2

