Mecanil Products

MECANIL SG160

Manual

GENERATION 2

All rights reserved. Specifications are subject to alteration.
Mecanil Oy Ab can not be held responsible for possible type errors or inconsistencies in this spare parts list.

Model

☐	**SG160 G2**	• Works with 2 hydraulic lines, pressure/pressure (grapple open/close). • Electric wire on the crane boom. • Pushbuttons that can be installed in joystick.
☐	**SG160 RC-T G2**	• Works with 2 hydraulic lines, pressure/pressure (grapple open/close). • Integrated wireless control. • Wireless control with handheld remote.
☐	**SG160 RC-M G2**	• Works with 2 hydraulic lines, pressure/pressure (grapple open/close). • Integrated wireless control. • Wireless control with pushbuttons that can be installed in joystick.
☐	**SG160 A G2**	• Works with 2 hydraulic lines, pressure/pressure (grapple open/close). • Electric wire on the crane boom. • Pushbuttons that can be installed in joystick.. • Incl. collecting unit (multi-tree handling).
☐	**SG160 A RC-M G2**	• Works with 2 hydraulic lines, pressure/pressure (grapple open/close). • Integrated wireless control. • Wireless control with pushbuttons that can be installed in joystick. • Incl. collecting unit (multi-tree handling).

Notes

© 2019 Mecanil Oy Ab

Contents

Model 2
Notes 2
Contents 3
We thank 5
Safety instructions 6
- General safety instructions 6
- Instructions for safe operation 7
- Description of labels / Warning labels 8
- Placement of labels on the product 9

Installation 10
- Recommendations and tips 10
- Contents of the delivery 12
  - *Radio control - handheld remote transmitter (RC-T) 12*
  - *Radio control - transmitter with separate pushbuttons (RC-M) 12*
  - *Radio control - transmitter with separate pushbuttons and collecting unit (A RC-M) 13*
  - *Cable control - without collecting unit 14*
  - *Cable control - with collecting unit (A) 14*
- Basic installation instructions 15
- Take in use - handheld remote (RC-T) 18
- Take in use - remote with push buttons (RC-M) with or without collecting unit 20
- Take in use - cable control with push buttons, with or without collecting unit (A) 22
- Control with the cranes own remote 24

Use and Maintenance 27
- Initial check before use 27
- Check after first use 28
- Daily use and maintenance 29
- Service 29
- Chain lubrication 29
- Tensioning the drive belt 30
- Check tension of the belt after tensioning or replacement 31
- Tensioning the saw chain 32
- Replacing saw bar and saw chain 33
- Adjusting the speed of the saw bar 35
- Lubrication points 36

Hydraulics 37
- Valve set 37
- Hydraulic schematic 38
- Valve for collecting unit 39

Electronics 40
- Electronics schematic 40
- MRemote 1.0 logic 41

Technical data 42

© 2019 Mecanil Oy Ab

Measurements SG160 (without collecting unit) 43
Measurements SG160 A (with collecting unit) 44
Technical data - wireless control 45
Instructions for pairing transmitter to receiver 47
Warranty conditions 48
Declaration of conformity 49
Form - Warranty application 51

We thank

you for the confidence you've showed us in your choice of Mecanil SG160 grapple saw.

This small and lightweight grapple saw, with a weight from only 190 kg, works the same way as the popular bigger grapple saws SG220 and SG280.
Suitable for felling of energy wood and removing of trees and branches in parks for example. This grapple saw has no need for any extra hydraulics and it works with a low oil flow rate. It is also very easy to install.

By using the product in a suitable manner and with regular maintenance it will serve you for many years.

Read the instructions carefully!
Even if you have experience with this type of product, we recommend that you read our instructions carefully to familiarize yourself with the product. The instructions contain information that is essential for safety and efficiency, but also for the factory warranty to apply. When receiving your purchased product, check that there are no shipping and transport damages on your product. If there should be any damages or if parts are missing, contact your dealer immediately.

It is the user's obligation to familiarize him/herself with the use of the product and to follow the instructions carefully. It is the responsibility of the user to make sure that the mounting and connections between the grapple and crane are designed and adapted to handle the loads and strains of the grapple with a safety margin. It is the responsibility of the user to ensure, for example, that the vehicle has the necessary capacity to handle the use of grapple saw.
Mecanil Oy Ab reserves the right to change equipment and maintenance instructions as well as data without prior information.

Summary!

1. Read the instruction.
2. Follow the instructions and contact your dealer if necessary.
3. Make sure the crane and hydraulic system are capable of handling a grapple saw.
4. Lubricate and service the grapple as mentioned in the instructions.
5. Have a professional repair any possible damages (even small ones) immediately.
6. Always work in a calm and foreseeing manner.

Take special note of all warnings, considerations and notes contained in this manual, which are marked with the following mark in the manual:



Manufacturer: Mecanil Oy Ab, Riksvägen 565, 07880 Liljendal, FINLAND

Safety instructions

General safety instructions


Read the manual carefully before using the crane.


Familiarize yourself with the functions and usage of the grapple saw.


Be especially careful when connecting and disconnecting the grapple saw to the crane or machine.


Extreme caution should always be exercised when using the grapple saw.


Make absolutely sure that no one is within a dangerous distance of the working grapple saw.


The operator must always have a clear oversight of the work area.


Never insert your hand or any other body part into the machine assembly or under hanging load during work or when the hydraulic system is active (pressurized).


Walking under a hanging load is always forbidden and the operator is not allowed to lift a load over people in any circumstances.


Do not overload the grapple saw.


Extraordinary caution should be taken when working near electrical lines or other sensitive areas. Keep the safety distances. Expect risk of unforeseen movements. Any local guidelines and regulations for working near power lines must always be followed.


When working in cold or especially freezing temperatures, all movements should first be performed carefully to soften seals in the cylinders and valves.


Never let an outside person handle the grapple saw / machine, before you make sure that this person has understood all operating and safety instructions.


Always shut down the machine for maintenance, service and repairs. Care should always be taken when maintaining, servicing and repairing.


The tilt function is equipped with a shock valve to prevent overloading the cylinders and other breakage.


The cylinder for the grapple claws is equipped with a load holding valve.

© 2019 Mecanil Oy Ab

Instructions for safe operation



It is strictly forbidden to be inside of the risk zone of the grapple saw or crane.



Extraordinary caution should be taken when working near electrical lines or other sensitive areas. Keep the safety distances. Expect risk of unforeseen movements. Any local guidelines and regulations for working near power lines must always be followed. Be especially careful when connecting or disconnecting the grapple saw on the crane or machine.



The operator must always have a clear oversight of the work area.



Never insert your hand or any other body part into the machine assembly or under hanging load during work or when the hydraulic system is active (pressurized).



Walking under a hanging load is always forbidden and the operator is not allowed to lift a load over people in any circumstances.



Localize any problem before any mending attempts, this will prevent unnecessary work and possibly worsening the situation.



The grapple saws hydraulic hoses and pipes must always be kept in good condition. Replace any of these immediately when any weakening is detected, especially the ones connected to the grapple claws. Inspections are to be done daily. Air in the hydraulic system can cause unforeseen movements, so always “bleed” the system by driving the cylinder end-to-end several times after replacing any part of the hydraulic circuit.



Use original parts, by using original parts will ensure a more problem free use of the product. Also note that if a failure is a result of not using original parts, the user assumes all risk.



Never let an outside person handle the grapple saw / machine, before you make sure that this person has understood all operating and safety instructions.



Always use appropriate safety gear, like helmet, safety goggles etc.



The cylinder for the grapple claws is equipped with a load holding valve.

Leave the holding valve installed, when the grapple saw will be used for taking down trees in pieces. (knuckle boom cranes, truck cranes, tele-handlers or similar).
The valve prevents the the grapple from opening (and dropping the load) in case of a hose break.
Uninstall the valve, if the grapple saw will be used to fell whole trees that will be cut at ground level. (Forestry harvesters, forwarders, excavators or similar).

© 2019 Mecanil Oy Ab

Description of labels / Warning labels

Labels and warning symbols on the grapple



Warning for risk of crushing

Be aware of the risk of being crushed by the grapple arms, tilt function and other moving parts on the grapple. Negligence may lead to severe or fatal injuries.



Warning for the saw

Be aware of the risk of the saw.
The machine must always be turned off before doing any maintenance, service or repairs on the grapple saw. Negligence may lead to severe or fatal injuries.

Other labels that also relate to the use of the grapple saw



Risk zone 50 m (50 yards).
The grapple saw also inherits all possible warnings that applies to the machine and/or crane it's installed on

Eg. bigger risk zone.
Make sue you always have a clear view of the working area. Negligence may lead to severe or fatal injuries.



Usage of safety gear

Always use appropriate safety gear to avoid injuries during your work.

© 2019 Mecanil Oy Ab

Placement of labels on the product

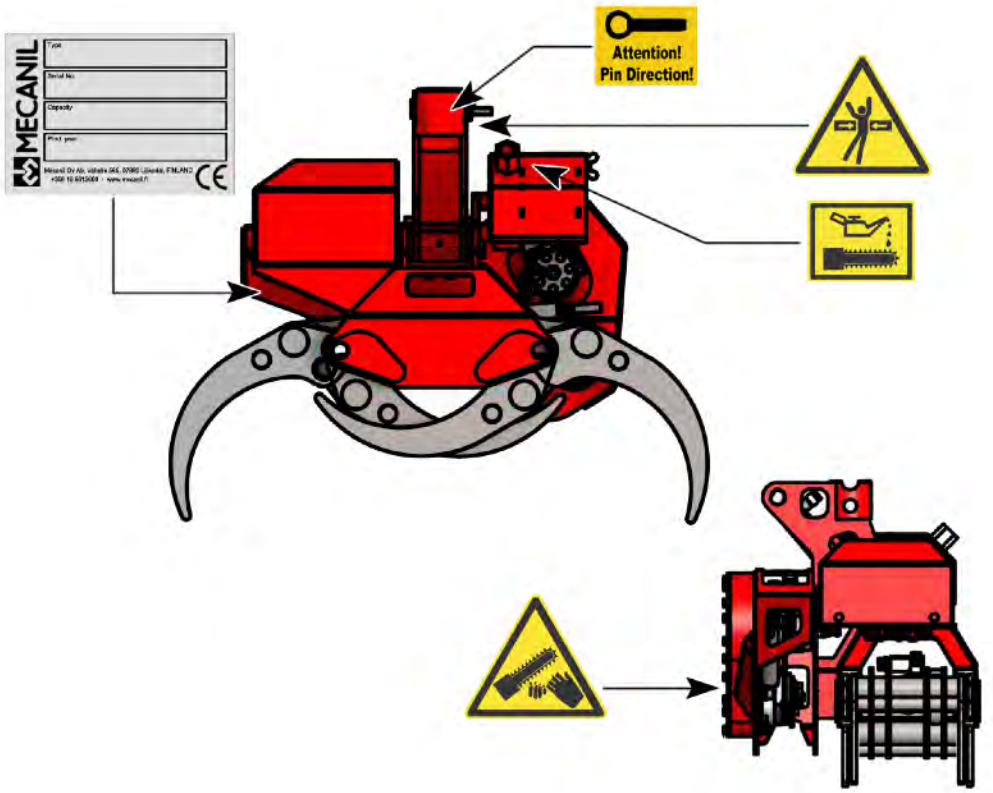



Crush risk



Saw warning



Chain lubrication oil
The label indicates where to fill lubrication oil.



Attention! Pin Direction!

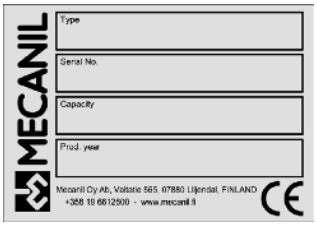

Serial number badge
Information: Model, serial number, capacity and year of production.

© 2019 Mecanil Oy Ab

Installation

Recommendations and tips

There are some recommendations and tips to consider when installing the grapple saw.
The grapple saw can perform slightly different depending on the machine which it is mounted on.

The SG160 grapple saw work very well on trucks with long cranes. The SG160 with radio control is popular, because no power cable needs to be installed along the crane boom. Only 2 hydraulic lines are needed (grapple open & grapple close).

Note! No bleed line (from saw motor) needed.

The SG160 is to be mounted free hanging, with a rotator and link.
Fixed mounting is not allowed.

We recommend a minimum of ½" hydraulic lines along the boom.
If quick connectors are used for the hydraulic lines, use one size bigger connectors in comparison to the hose size.
NOTE! No bleed line (from saw motor) needed..

If the hydraulic hoses are too small the saw will feel slow and counter (back) pressure will rise. The counter pressure should not exceed **50 bar (725 PSIs)**.

SG160 can be installed on a variety;
Trucks, forwarders, excavators etc.

These recommendations should be noted especially when installing the grapple saw on a crane with a long boom. For example on a crane with a reach of 20-35 m (60 -120 ft), eg. knuckle boom cranes, telehandlers or similar.

When installing on shorter cranes smaller lines will probably suffice.

The recommended oil flow for SG160 is approx. 40-80 l/min. (10 - 20 gpm).
The grapple saw will also work with less oil flow (eg. 40l/min.[10gpm]), but the saw will then work slower.

NOTE! Load holding valve on the grapple cylinder:
Leave the valve installed, when the grapple saw is installed on a machine meant for taking down a tree in smaller pieces. (Mobile cranes, tele handlers, knuckle boom cranes or similar)
Uninstall the valve, if the grapple saw will be used to fell whole trees that will be cut at ground level. (Forestry harvesters, forwarders, excavators or similar).
The machine must always be shut down when servicing or doing maintenance work on the grapple saw!

© 2019 Mecanil Oy Ab

Open-center valve for grapple function.
For the chain lubrication pump to work as supposed, the pressure must be relieved from the hydraulic circuit for the grapple function. This may be achieved by using a “open-center” valve (on the cranes valve set), meaning that oil can freely flow in or out when no function is activated. Relieving pressure will allow the pump to reset and fill with lubrication oil and again administer it when the saw function is initiated next time.

Keep Grapple close function initiated while using tilt up, tilt down or saw functions. This produces oil pressure to the grapple saw. Tilt up and tilt down functions will also work with keeping grapple open function activated.

NOTE!

All machines are different.
Different machines have different hydraulic pressure and flow.

Please contact the dealer or manufacturer for more information.

© 2019 Mecanil Oy Ab

Contents of the delivery

Radio control - handheld remote transmitter (RC-T)

Hydraulic hoses for grapple open / grapple close

Grapple close > <
Grapple open < >





Transmitter



2 pcs. batteries

1 pc. grapple saw SG160



1 pc. battery charger

If the grapple saw is ordered with rotator and link, the delivery will also include hydraulic fittings for the grapple hoses to rotator.

Radio control - transmitter with separate pushbuttons (RC-M)

Hydraulic hoses for grapple open / grapple close

Grapple close > <
Grapple open < >

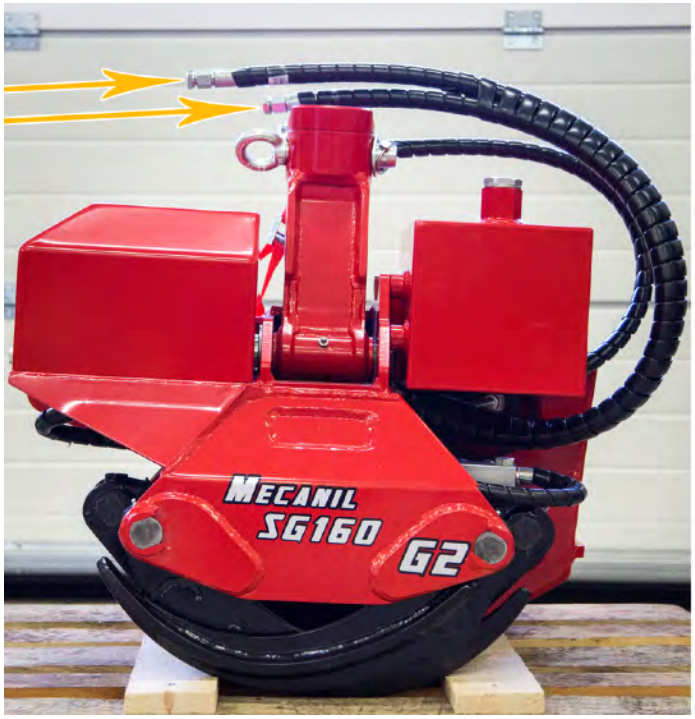

Transmitter

Pushbuttons

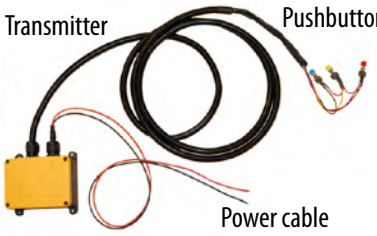

Power cable



2 pcs. batteries

1 pc. grapple saw SG160



1 pc. battery charger

If the grapple saw is ordered with rotator and link, the delivery will also include hydraulic fittings for the grapple hoses to rotator.

© 2019 Mecanil Oy Ab

Radio control - transmitter with separate pushbuttons and collecting unit (A RC-M)

1 pc.
grapple saw
SG160



Hydraulic hoses for grapple open / close. Grapple close > <
Grapple open < >

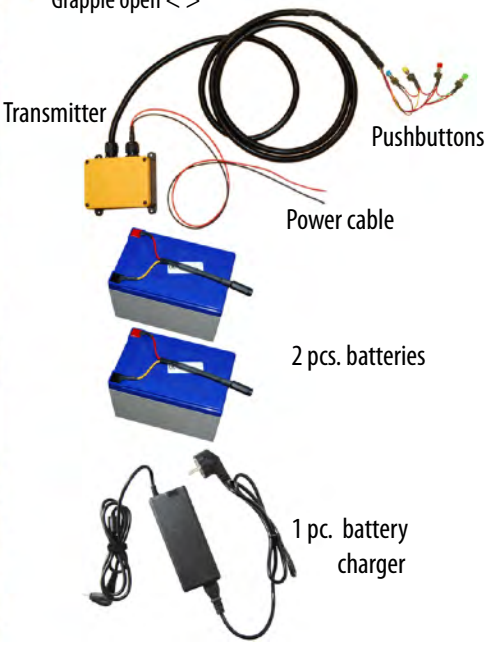

If the grapple saw is ordered with rotator and link, the delivery will also include bolts for installation as well as hydraulic fittings for the grapple hoses to rotator.

Cable control - without collecting unit

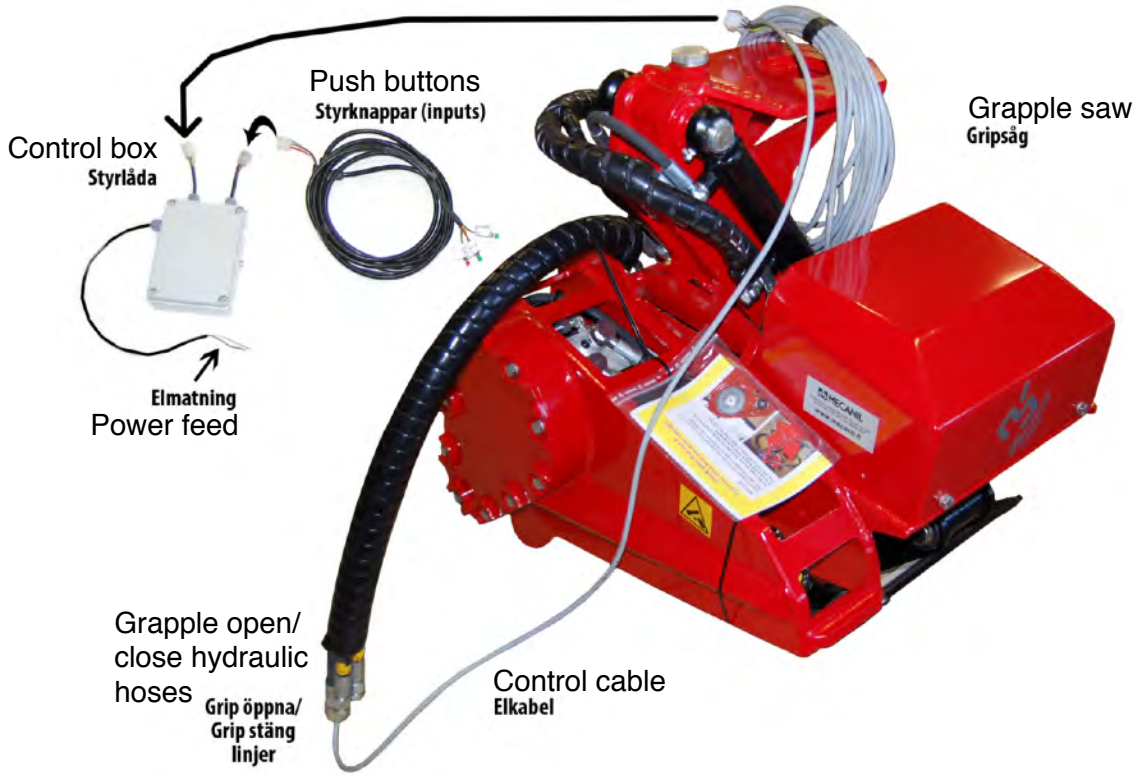

If the grapple saw is ordered with rotator and link, the delivery will also include bolts for installation as well as hydraulic fittings for the grapple hoses to rotator.

Cable control - with collecting unit (A)

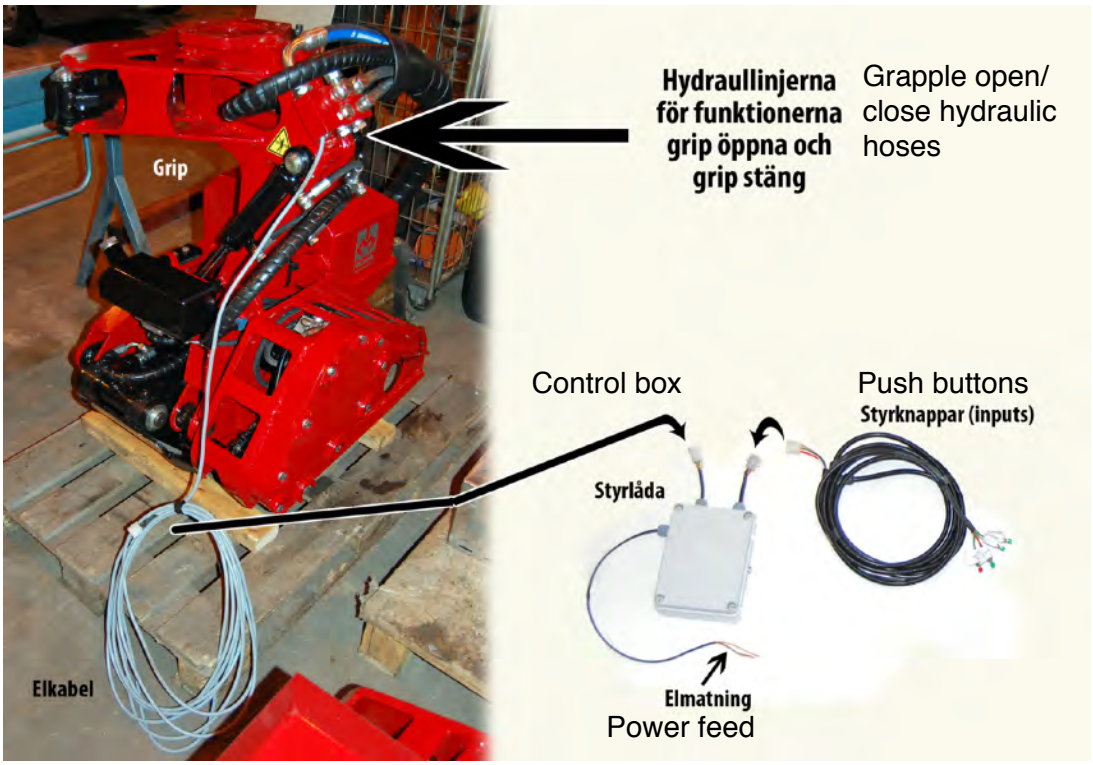

If the grapple saw is ordered with rotator and link, the delivery will also include bolts for installation as well as hydraulic fittings for the grapple hoses to rotator.

© 2019 Mecanil Oy Ab

Basic installation instructions

Installation may vary depending on what type of machine it is installed on, all machines are different.

Please contact the dealer or manufacturer for more information.

**NOTE! TAKE EXTREME CAUTION WHILE INSTALLING THE UNIT,
AS THERE IS EVIDENT RISK FOR GETTING CRUSHED.
MAKE ABSOLUTELY SURE THAT THE MACHINE IS TURNED OFF DURING THE INSTALLATION!**

Install the grapple saw at the tip of the crane.
Use rotator and link.

SG160 attachment
without collecting unit: 69/30 (axle)

SG160 attachment
with collecting unit: 173/6 (6 bolts)



**NOTE!
Recommendation: use 1/2” hoses to the grapple saw, to ensure enough oil flow to the grapple saw. (approx 40-80 l/min.). This may apply especially when the unit is installed on a machine with a long boom. (eg. a truck crane, knuckle boom crane).**

**It also helps to install 1/2” hoses close to the tip of the crane.
Eg. if the crane has a JIB, the JIB can have bigger hoses.**

**NOTE!
Pin Direction on SG160 with 69/30 attachment!**
If the pin is positioned in the wrong direction, the pin will collide with the oil tank/RC box.



The grapple saw will also work with less oil flow but the saw will run slower.

If fast connectors are used on the hydraulic hoses, use one dimension bigger connectors in comparison to the hoses, as fast connectors often restrict oil flow significantly.

© 2019 Mecanil Oy Ab

Rotator

SG160 with radio control:
To allow free (endless) rotation for the grapple saw you need a rotator with the option of channeling the oil for grapple open / close through the axle of the rotator.
In other cases the hydraulic lines can be installed to bypass the rotator.

Grapple open/ close hydraulic hoses



SG160 with cable control:
Use a hydraulic hose to shield the control cable. Hose size approx. 1/2”-3/4”. Preferably bundle the grapples open and close hydraulic hoses together with the shield-hose for the control cable, **bypassing the rotator**.

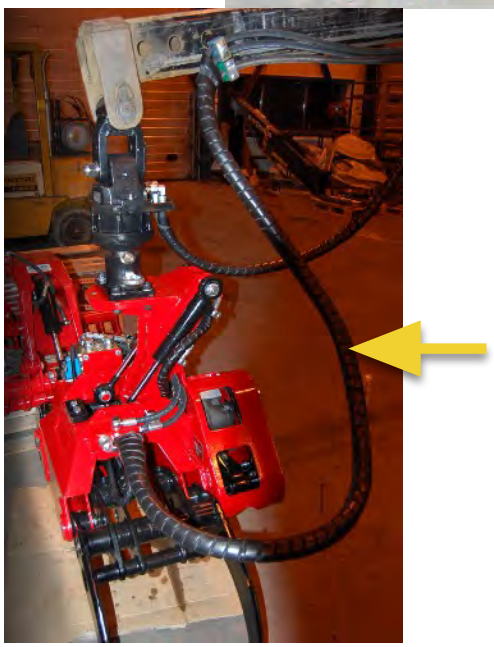

SG160 with cable control:
Install the control cable to the cabin.

Make a junction for the cable on one or several points along the boom.
This can be done in many ways depending on what kind of base machine the grapple saw is installed on.
This is to prevent the need to change the whole cable if a break were to occur.
Some examples.

Example 1:



Example 2:



Example 3:

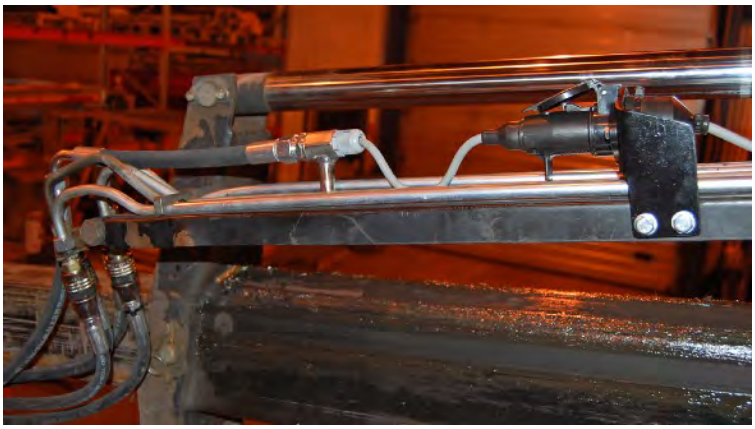

Take in use - handheld remote (RC-T)

NOTE! Read page 27 (inspection before use) before using the product.

Remote - buttons

Functions:

1. Tilt up

2. Tilt down

3. Saw

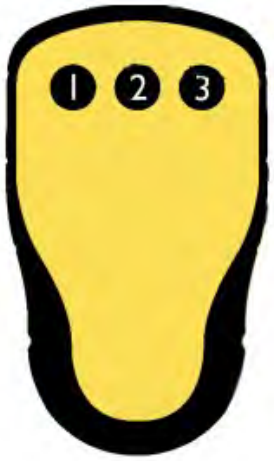

Grapple open / close functions are activated via the cranes integrated controls.

Keep the grapples close function activated while using the grapple saws functions. This produces hydraulic pressure to the circuit.

Charging the battery:

The delivery contains two batteries and one 110-240 V battery charger for the grapple saw.

If you wish to charge the batteries in the machine (12V or 24V) an inverter needs to be used.

The batteries are LiFePO4 batteries and need a smart-charger to be charged.
Ask your dealer for more information.

When the battery is empty, disconnect it to prevent damages to the battery. (The battery will usually get empty very suddenly).

For example, even if it's the end of your work day when the battery runs out, do not leave it connected. As the grapple saw's electrical system still is active and could deep-discharge the battery. Deep-discharging a LiFePo4 battery may destroy the cells indefinitely.

© 2019 Mecanil Oy Ab

Controlling the grapple saw by remote safely:

SG160 RC-T is controlled only by the remote.

No additional control box is to be installed.

Example:
Install a small plate to the side of the cranes remote, where the grapple saw's remote can be placed. The grapple open / close functions are controlled by the original control for the crane.





Take in use - remote with push buttons (RC-M) with or without collecting unit

NOTE! Read page 27 (inspection before use) before using the product.

Pushbuttons - Functions:



= Tilt up (brown cable)

= Tilt down (yellow cable

= Saw (purple cable)

= Collecting unit (green cable)

The grapple open / close functions are controlled by the original integrated controls.

Keep the grapple's close function activated to use the units other functions, this build hydraulic pressure in the circuit. Grapple open function will also allow the tilt up and down functions to run. For safety reasons, the saw will only run with grapple close function activated.

Charging the battery:

The shipment includes two batteries and one 110-240V charger for the remote.

If one wishes to charge the battery from a 12V or 24V system the charger needs to be connected to an appropriate inverter.

The batteries are based on LiFePo4 technology and always need to be charged with a smart charger meant for LiFePo4 batteries with an appropriate Ampere feed.
Ask your dealer or the manufacturer for more information.

When the battery runs out disconnect the battery to prevent any damages to the battery. The battery will run out very abruptly, as it's electronically controlled by a circuit that will disconnect the load when charge gets too low.

For example, even if it's the end of your work day when the battery runs out, do not leave it connected. As the grapple saw's electrical system still is active and could deep-discharge the battery. Deep-discharging a LiFePo4 battery may destroy the cells indefinitely.

© 2019 Mecanil Oy Ab

Controlling the grapple saw by separate push buttons:

SG160 RC-M and SG160 A RC-M are controlled by push buttons that are connected to the transmitter.

Grapple open / close functions are controlled by the original integrated buttons.

Install the transmitter on a suitable place in the cabin (not inside any box, for radio functionality). For example on the back of the seat. From here it's easy to install the push buttons where you wish.

Install the push buttons by your own preference.

Example:



Saw

Tilt up, tilt down and collecting unit

Connect the power feed to the transmitter. 12V or 24V.
Red cable +
Black cable -

Take in use - cable control with push buttons, with or without collecting unit (A)

NOTE! Read page 27 (inspection before use) before using the product.

Pushbuttons - Functions:



= Tilt up (brown cable)

= Tilt down (yellow cable

= Saw (purple cable)

= Collecting unit (green cable)

The grapple open / close functions are controlled by the original integrated controls.

Keep the grapple's close function activated to use the units other functions, this build hydraulic pressure in the circuit. Grapple open function will also allow the tilt up and down functions to run. For safety reasons, the saw will only run with grapple close function activated.

© 2019 Mecanil Oy Ab

Wireless control with separate push buttons:

When choosing wireless control with separate push buttons the push buttons can be installed in the joysticks. The push buttons are connected to the control box.

Grapple open / close functions are controlled by the original integrated buttons.

Install the transmitter on a suitable place in the cabin (not inside any box, for radio functionality).
For example on the back of the seat. From here it's easy to install the pushbuttons where you wish.

Install the pushbuttons by your own preference.



Example:



Saw

Tilt up, tilt down and collecting unit

Connect power to the control box.
Red cable +
Yellow cable -

Control with the cranes own remote

This is an example of installation with use of the cranes own remote control.

NOTE! This type of installation may not be possible on all machines or cranes. Installation may vary depending on the machine. This is an example.

Oversight

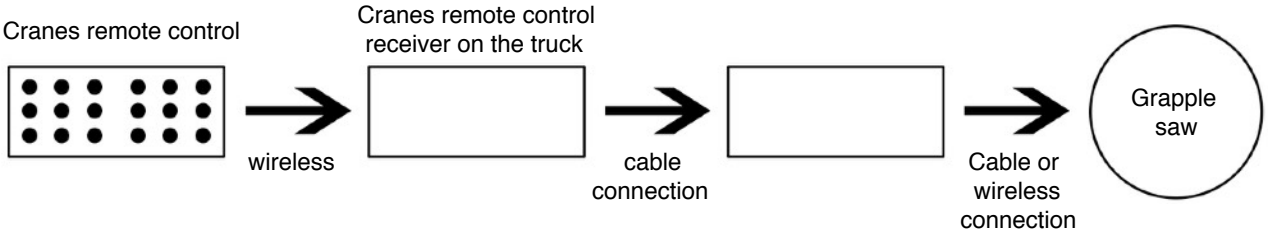

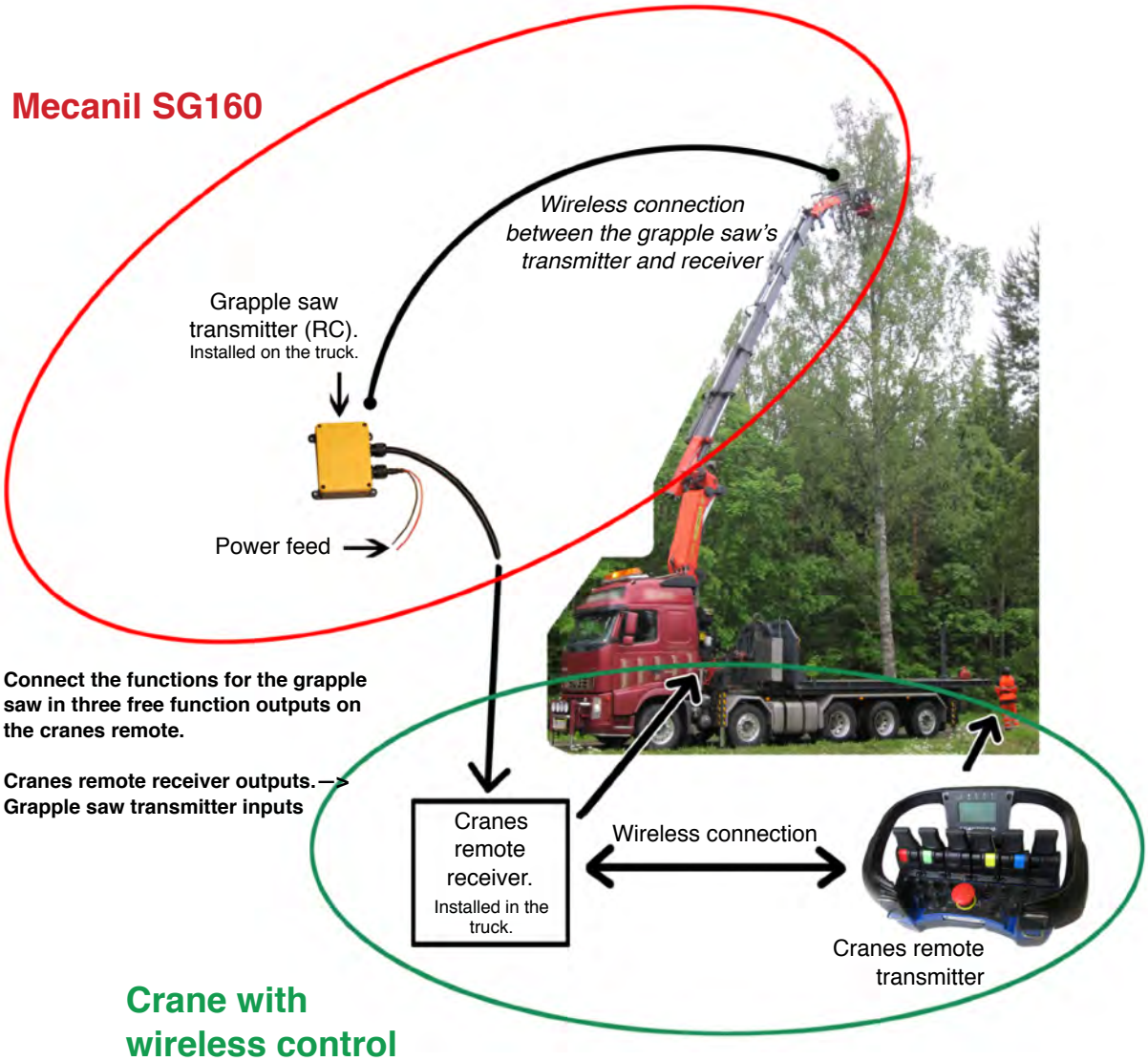

This example is of an installation on:
Crane: Palfinger 72002 Performance **Cranes remote:** Scanreco P2

1. Make sure you have sufficiently free channels to use on the remote. The SG160 needs 3 channels.
2. For tilt up/down functions usually a self-centering paddle switch is used. For saw function a push button is usually used. We do recommend that two hands need to be used for activating the saw function.

Chart for Scanreco P2 remote control:

(Schematics can be requested from the dealer or manufacturer of your own crane and remote.

Connections under the main connector

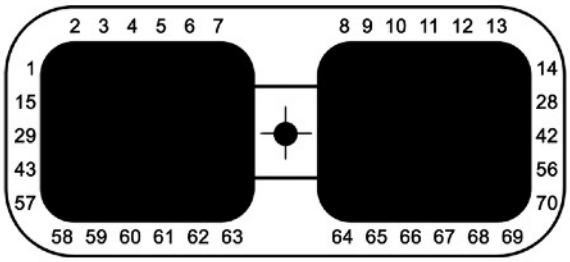

		Pin	Connection	
Cable 5 x 2,5 mm2	Red	59	+	Feed
	Blue	57	-	Feed
	Green	43	115	Power supply
	White	44	114	Manual
	Brown	58	113	Radio

Jumper 1,5 mm2 svart	45	Jumper 1,5 mm2 svart	46
	48		47

Switches, digital on/off

		Pin	Connection			Switch Transm.
Kabel 12 x 0,75 mm2	White	34	57	throttle +/-	D-UT 1	S1
	Brown	19	50	Motor Start	D-UT 2	S2
	Green	33	51	Motor Stop	D-UT 3	
	Yellow	18	52	Free	D-UT 4	S4
	Grey	32	56	Free (work lights)	D-UT 5	S5
	Pink	35	60	AOS manual	D-UT 6	S7
	Blue	17	61	Free	D-UT 7	S8
	Red	31	62	Free	D-UT 8	
	Black	16		2 receiver	D-UT 9	S9
	Purple	30	53	(OLP)	D-UT 10 and CAN-Bus	
	Grey/Pink	15	58	(PJKSL)	D-UT 11	
	Red/Blue	29	59	(PJKSL)	D-UT 12	

- According to the table switches S4, S5 and S8 are free.
- Check which switch is connected to which button on the remote receiver on the truck.
- Then connect the right output on the receiver to the right input on the SG160 transmitter.
- See next page.

© 2019 Mecanil Oy Ab

SG160 with wireless control:

Connect as instructed below.

RC-M versions
Inputs:

Channel 1: Tilt up (blue button and brown cable)
Channel 2: Tilt down (yellow button and yellow cable)
Channel 3: Saw (red button and purple cable)
Channel 4: Collecting unit (green button and green cable)

See electronic schematic for more details.

For connection to integrate into cranes remote

SG160 :



Example of channels 1-5 getting the activation input from an external signal. The signal can be 9-40 Volts. The circuit board emulates activated button when there is an active input signal.

Inputs on the button emulator are meant to be connected by two wires each, so both positive and negative.

These inputs are polarity-independent, so you will not have to pay attention to if + or - goes in the right screw connector. However the channels are to be kept separate.

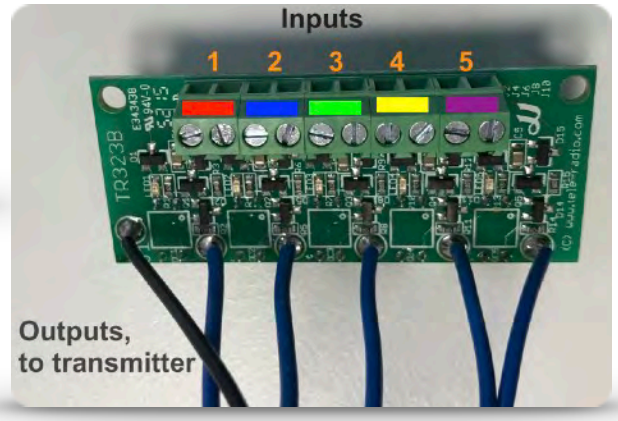

Any input can be assigned to any channel on the transmitter, as long as it's grouped to the same common connector (1 or 7).

Use and Maintenance

Initial check before use

NOTE! Load holding valve on the grapple cylinder:
Leave the valve installed, when the grapple saw is installed on a machine meant for taking down a tree in smaller pieces. (tele handlers, knuckle boom cranes or similar)
Uninstall the valve, if the grapple saw will be used to fell whole trees that will be cut at ground level. (Forestry harvesters, forwarders, excavators or similar).
The machine must always be shut down when servicing or doing maintenance work on the grapple saw!

- **Check that the hoses between the cranes tip and the grapple are of right length.**
  The hoses can not be too long as they may e.g. get underneath the grapple.
  The hoses can not be too short as the grapple may not have sufficient moving capabilities.
- **Keep a safe distance to the grapple saw at all times.**
- **Open and close the grapple several times to make sure any air comes out of the hydraulic system.**
- **Keep the grapple close function activated and then activate the saw function several times.**
- **Do some very small trial cuts on a tree in a safe place to get familiar with the actions and overall functionality with the grapple saw. Keep a safe distance!**
- **If something seems to not function properly, turn off the machine and contact your dealer.**
- **When you're doing your initial cuts, start with very small pieces approx. 20". After this you can gradually extend the pieces up to approximately 5 ft. While the pieces get bigger pay attention the weight distribution and how the grapple reacts to the different pieces.**
- **We recommend that the pieces do not exceed about 5 ft. in length.**
  A good rule of thumb can be to not cut bigger pieces than that the tip of the crane reaches the top of the tree to be cut.
  This applies to the use when cutting trees in pieces from top and downward (when installed on mobile cranes, knuckle boom cranes, tele-handlers etc.).

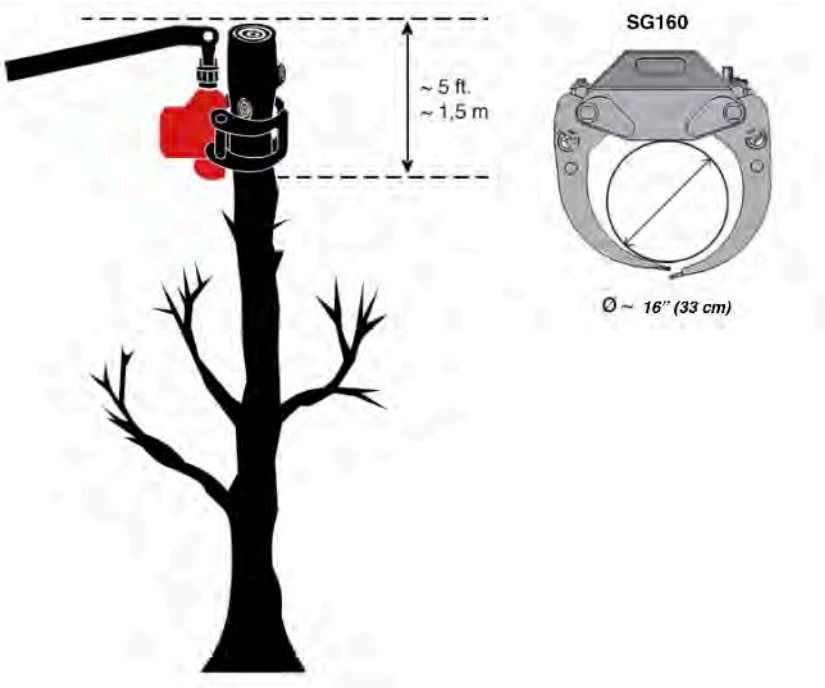

© 2019 Mecanil Oy Ab

Check after first use

ATTENTION

Check after 1-8 hours of use. Make sure the drive belt is tight, if it's loose it must be tensioned.



If the grapple saw is used while the drive belt is loose, the belt may be worn out in just a few days.

See how to tension the belt on pages 30-31.

Make sure all hydraulic fittings and hoses are tight, to prevent oil leaks. Also check tension on all bolts for the linkage from crane to grapple (rotator).

© 2019 Mecanil Oy Ab

Daily use and maintenance

NOTE
The machine must alway be turned off during any service or maintenance. Always take caution while servicing and maintaining your product.

The Grapple saw must be lubricated every 8 hours. See lubrication points on page 36. NOTE! The saw bar attachments lubrication is intended to be within 80-100h intervals.
Check that all hoses and fittings are tightly fastened.
Check rotator bolts' tightness.
Check saw chain tension.
Check drive belt tension.
Check for oil leaks, any damaged hoses or pipes must be replaced before use.
Check that the tilt unit's damping plate is intact. Do not use the Grapple saw without the damping plate as this may cause damage.
Fill chain lubrication oil in the tank if needed. The oil tank volume is approx. 2,5 l (0.65 US gal).
Service may only be done by an authorized person.
Use original parts.
Contact your dealer for more information on service and parts.

Service

Service and maintenance must be performed regularly to ensure a problem free and economic use of the grapple saw.

If any repair would need welding on the grapple saw, contact your dealer beforehand for instructions. Welding done wrong may compromise the integrity of the structure.

Chain lubrication

Fill chain lubrication oil in the tank if needed.
The oil tank volume is approx. 2,5 l (0.65 US gal).

This symbol is visible on the unit.
It indicates where to fill lubrication oil.
The tank is integrated in the tilt unit.



© 2019 Mecanil Oy Ab

Tensioning the drive belt

Losen the bolts for the saw motor (qty. 2)
Marked with green arrows.

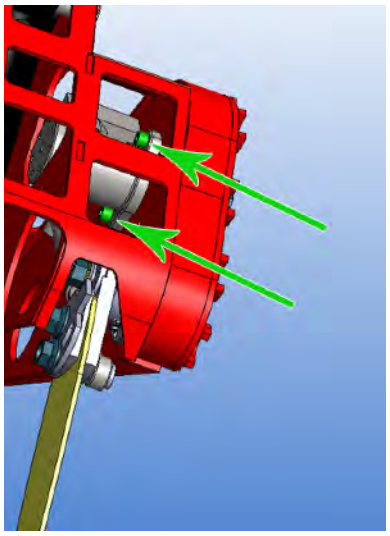

Tension the belt by tightening the saw motor diagonally upwards with a suitable tool (Marked with blue).

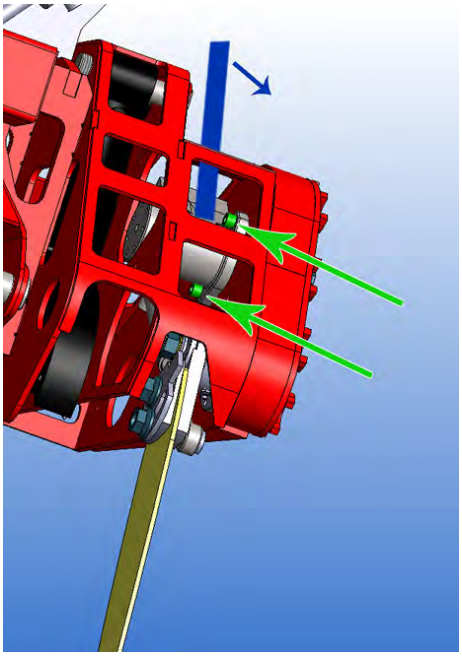

Tighten the saw motor in the direction of the green arrow.

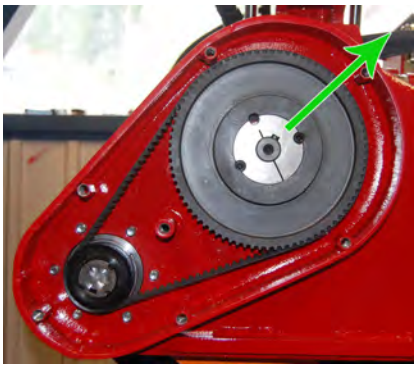

Check that the tension is correct.
Se next page.

© 2019 Mecanil Oy Ab

Check tension of the belt after tensioning or replacement

Example:

The belt should be possible to move about ca 5 mm (1/4”) in both directions (total ½”) when you try moving it quite firmly.

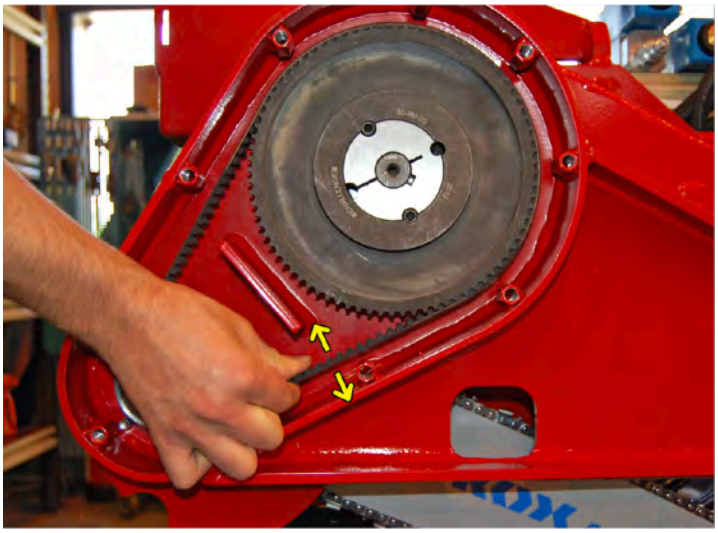

Another way to check the tension is to try to turn the belt 90°. This should be possible but only with a very firm hand.

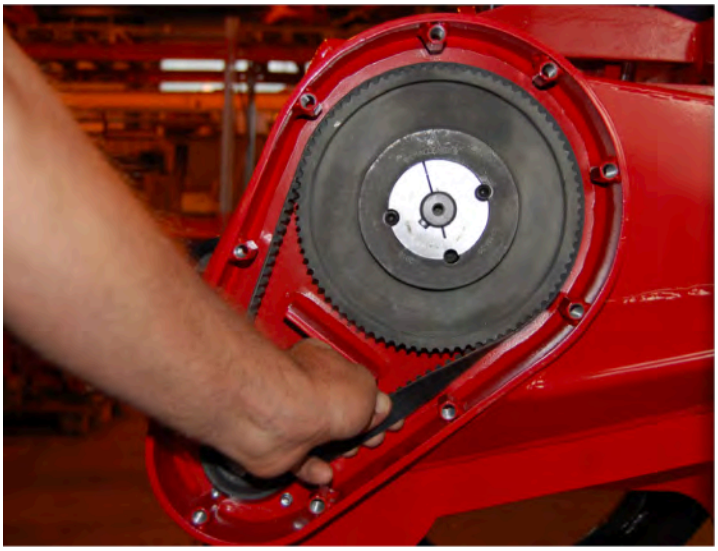

You should also be able to turn the bigger belt wheel (may be very heavy when the chain is tight).

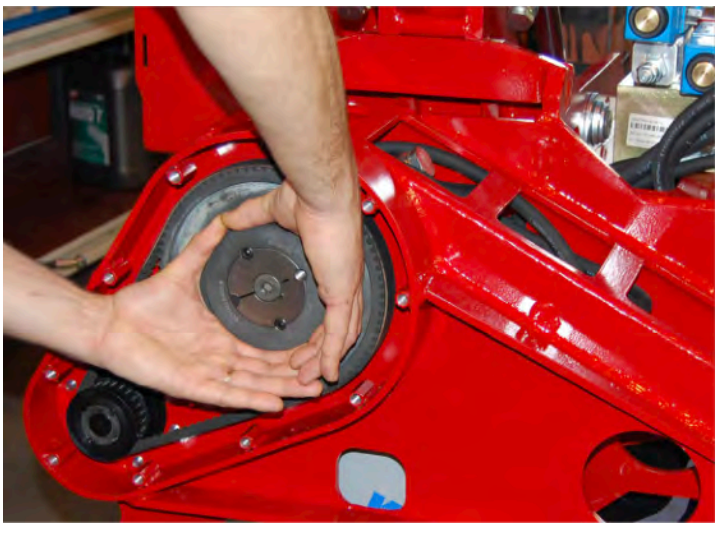

© 2019 Mecanil Oy Ab

Tensioning the saw chain

Tensioning the chain by excentric movement.

Loosen the two nuts.

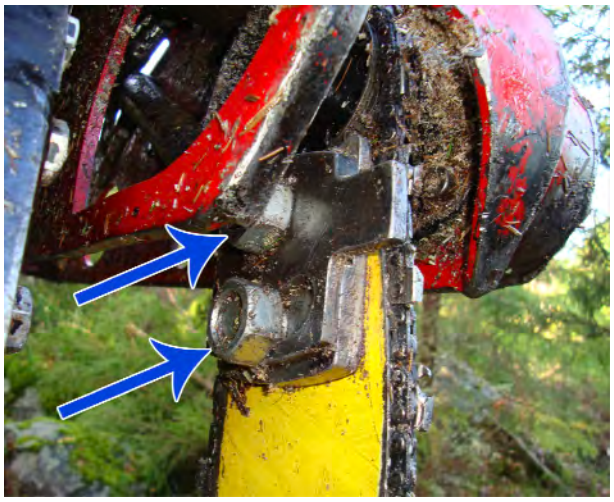

Tension the chain by hand, this should be enough. Alternatively the same wrench which fits the nuts will fit the tensioner also.





© 2019 Mecanil Oy Ab

Replacing saw bar and saw chain

Taking saw bar and chain off



1. Loosen the two nuts that hold the saw bar in place. Loosen the chain.





2. Wedge a tool between the bar and chain on the under side and turn the nut of the pulley upward.



3. The chain releases from the pulley, remove the chain.

4. Loosen the nuts for the saw bar further (if necessary). See that the two pins from the chain tensioner are outside the saw bar and pull off the saw bar.

© 2019 Mecanil Oy Ab

Install new saw bar and saw chain

1. Insert a new saw bar.



2. Put a new saw chain on the saw bar and pulley. Start by putting the chain on the top half of the saw bar and then on about half of the pulley.



3. Then turn the nut for the pulley downward until the chain is on.

4. Tighten the two nuts for the saw bar.

5. Finally tension the chain as mentioned on page 32.

© 2019 Mecanil Oy Ab

Adjusting the speed of the saw bar

Lowering the speed = turn the valve in (clockwise).
Raise the speed = turn the valve out (counter clockwise).

When turning the valve inward, the oil to the cylinder is restricted which slows down the saw bar.

NOTE!
If the saw bar comes out too fast, reduce the speed to prevent damage to the saw motor.

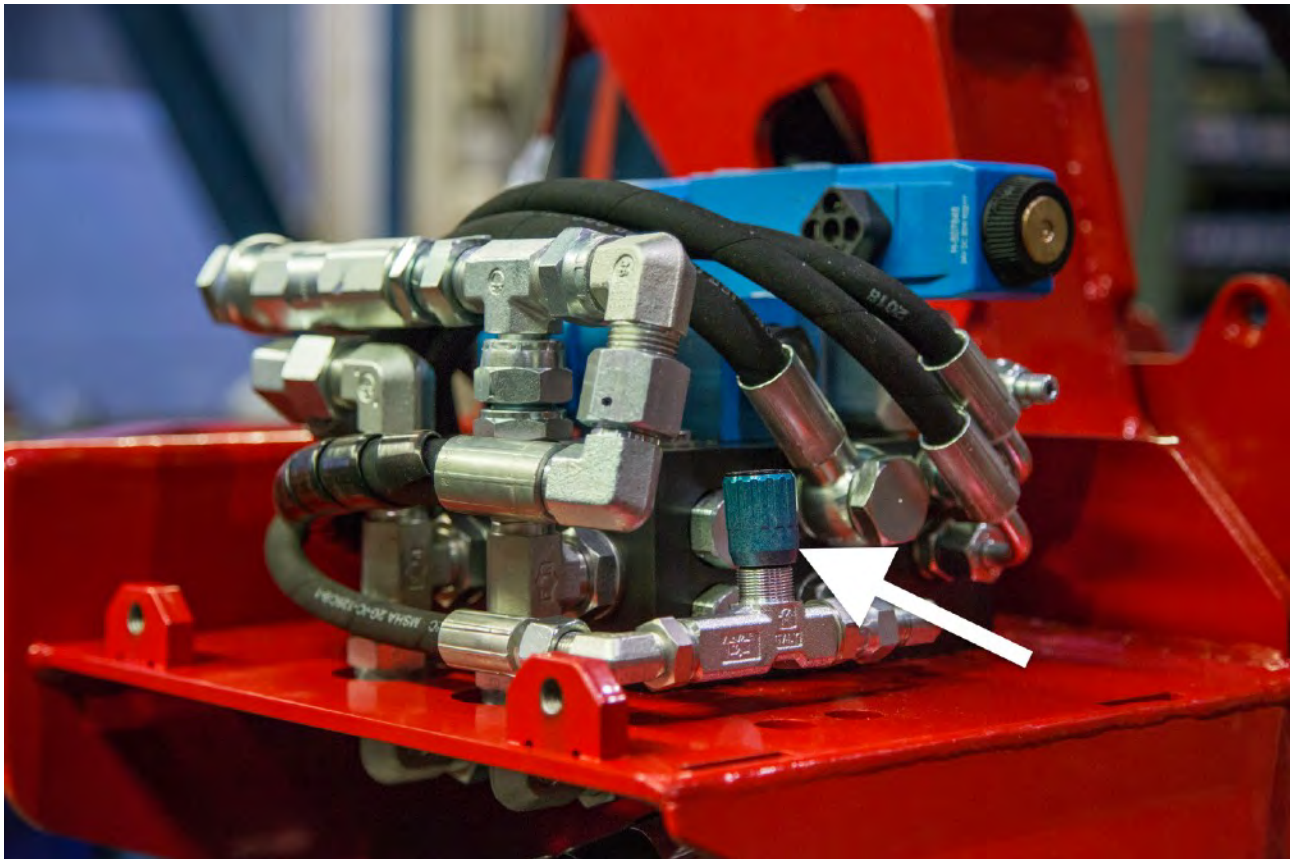

© 2019 Mecanil Oy Ab

Lubrication points

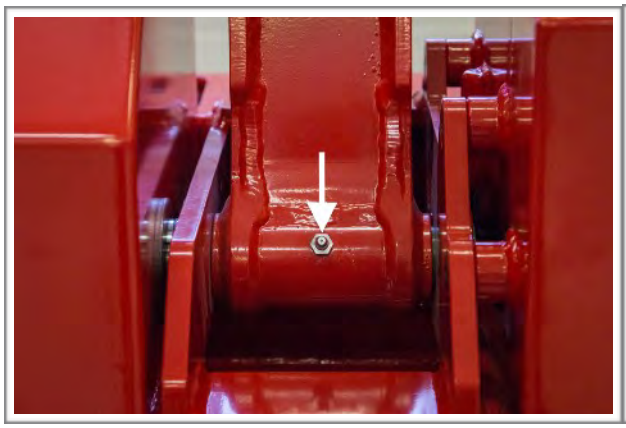

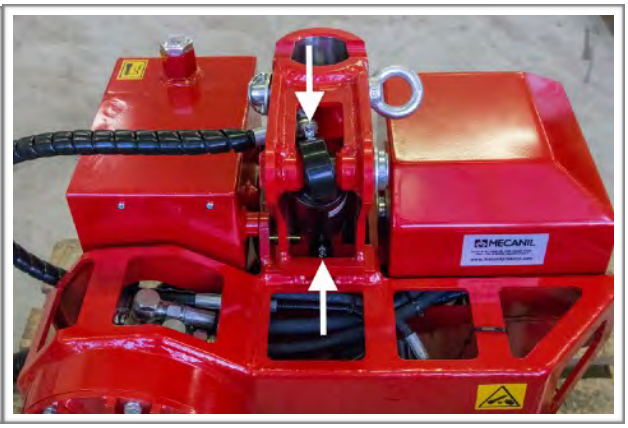

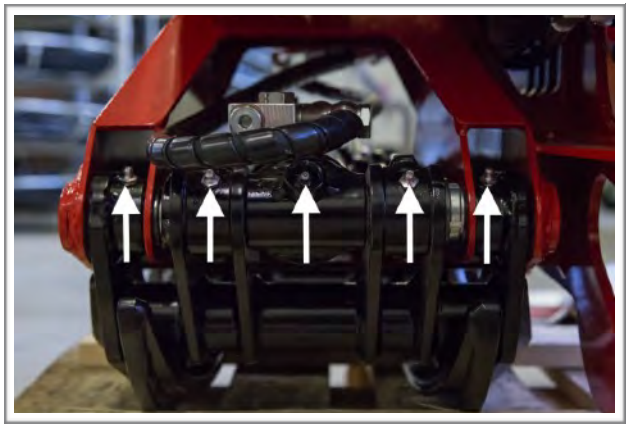

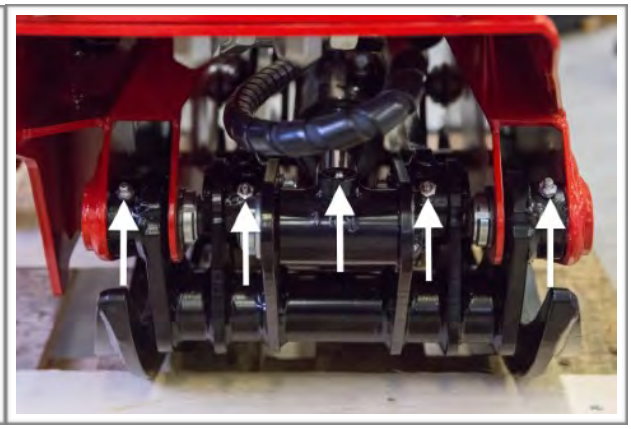



Lubricate the saw bar attachment in 80-100 h intervals.

Lubrication points on the collecting unit:



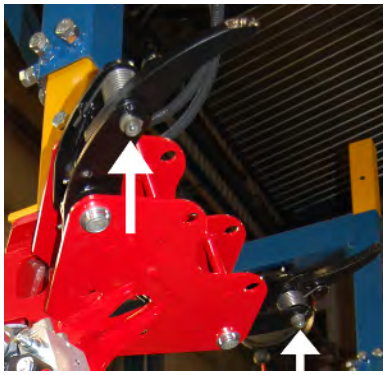



Hydraulics

Valve set

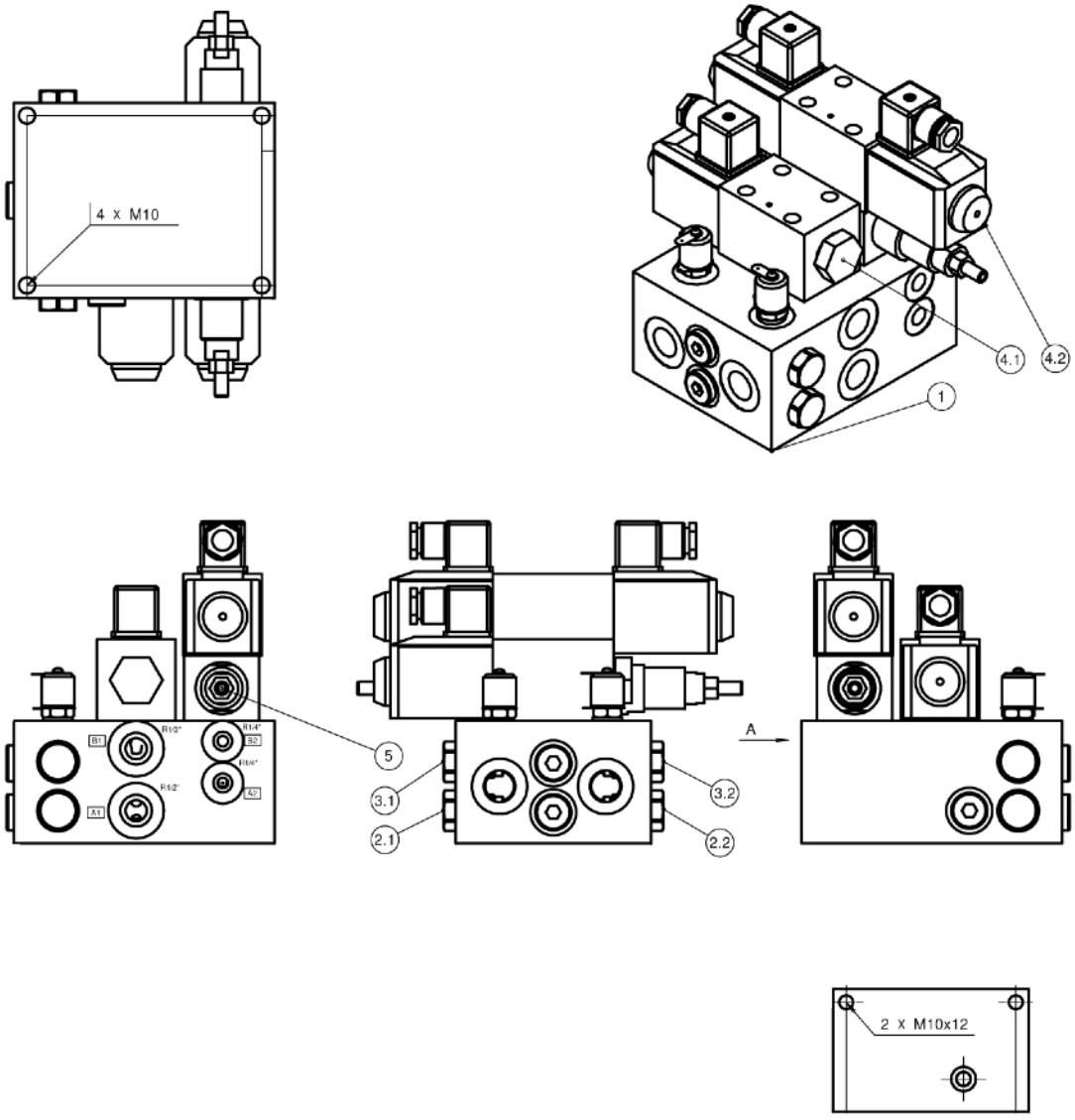

No.	Description	qty
1	Valve block	1
2	Checkvalve	2
3	Checkvalve	2
4	Directional valve	2
5	Double pressure restriction valve	2
6	Pressure measurement	2
7	Restrictor	1

© 2019 Mecanil Oy Ab

Hydraulic schematic

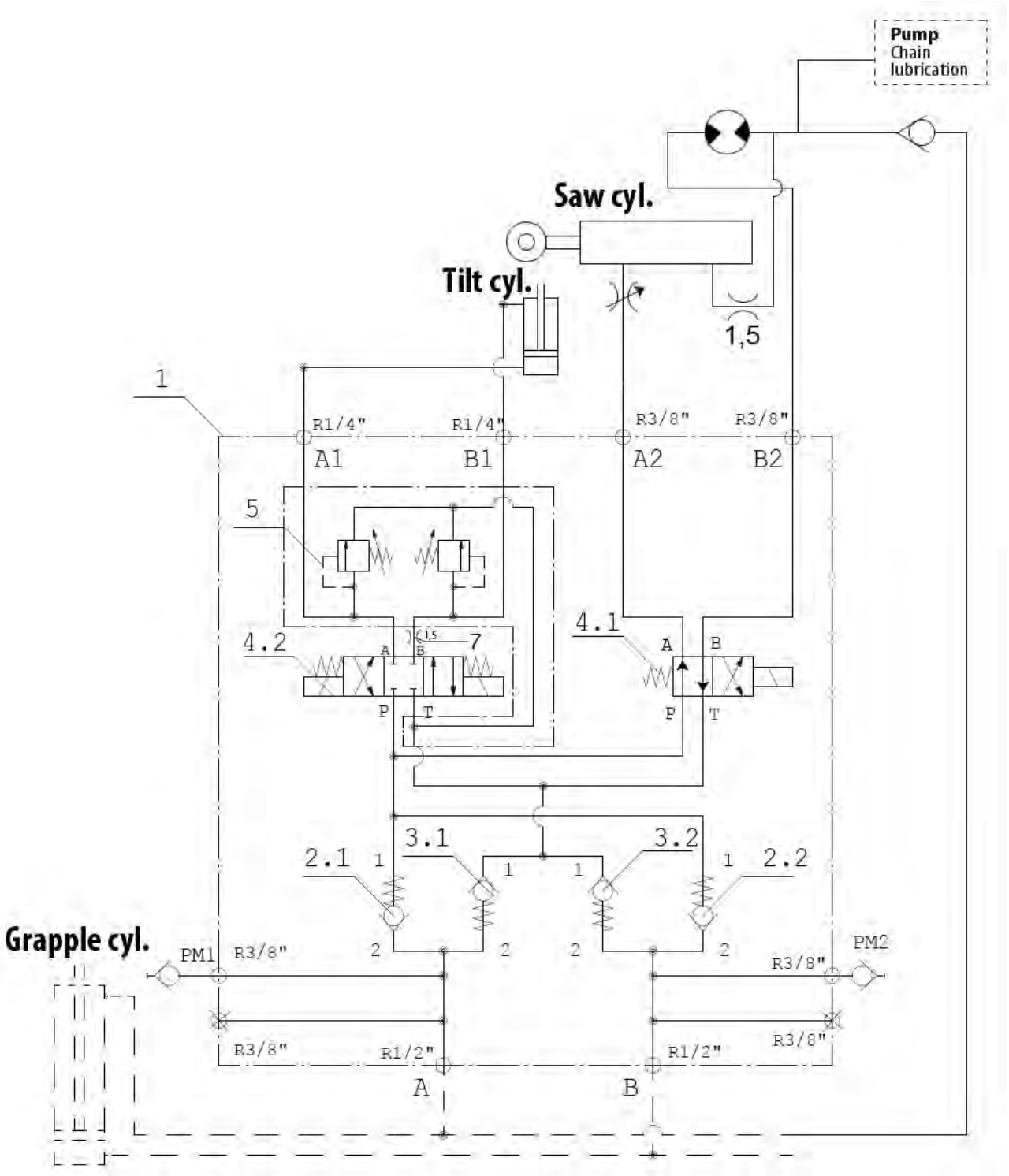

Valve for collecting unit

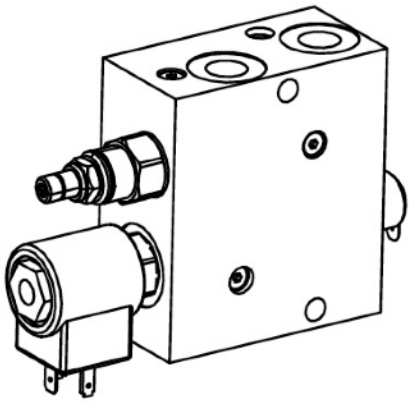

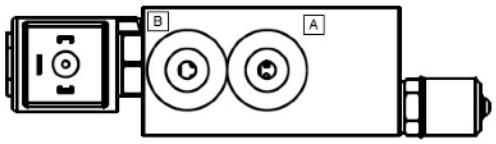

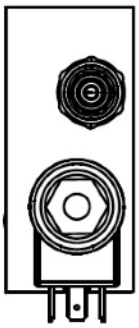

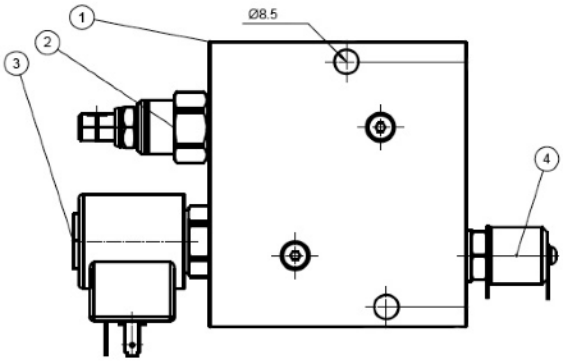

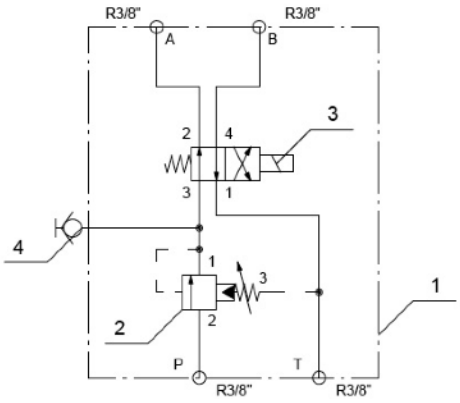

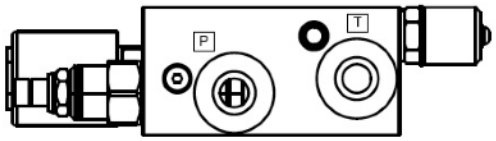

No.	Desription	Qty
1	Valve block	1
2	Pressure reduction valve	1
3	Directional valve	1
4	Pressure measurement	1
5	Solenoid	1

Electronics

Electronics schematic

SG160 G2 (cable control)
SG160 RC-T G2 (handheld wireless remote)

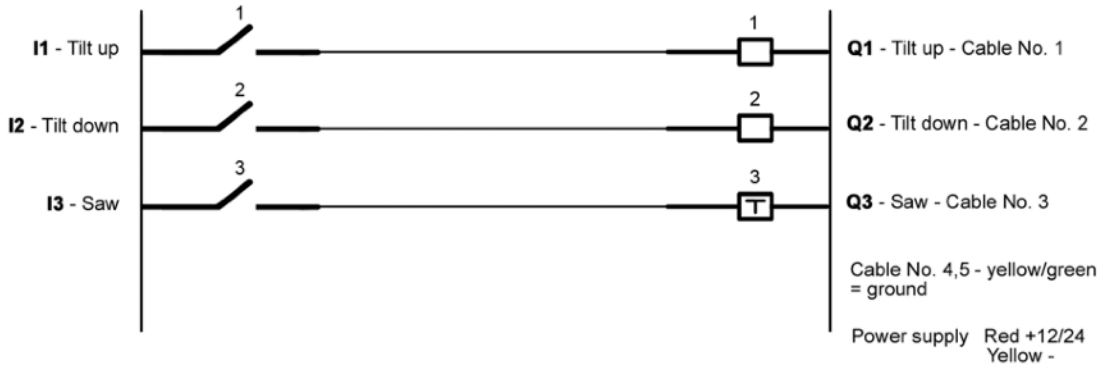

SG160 A G2 (cable control)

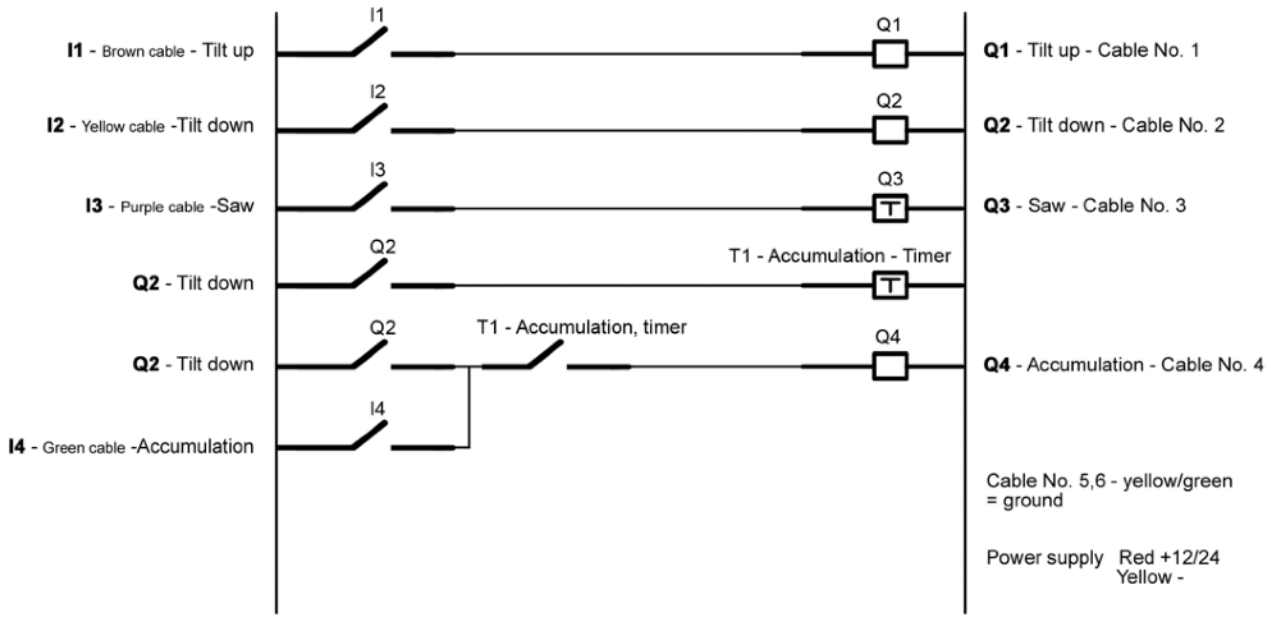

MRemote 1.0 logic

SG160 RC-M G2
SG160 A RC-M G2
(wireless control with separate push buttons)

Wireless Transmitter ***Wireless Receiver***

Ch.	Push-buttons	Cable color
1		Brown
2		Yellow
3		Purple
4		Green
5		
6		
7		
8		
9		
10		

Receiver	cable	Activates functions:
1 (+)	1	Ch. 1
2 (+)	2	Ch. 2 + Ch. 4
3 (+)	3	Ch. 3
4 (+)	4	Ch. 4
5 (+)		Not in use
6 (+)		Not in use
7 (+)		Not in use
8 (+)		Not in use
9 (+)		Not in use
10 (+)		Not in use

Function
Tilt up
Tilt down
Saw
Collecting unit

© 2019 Mecanil Oy Ab

Technical data

SG160

Model	SG160 G2	SG160 RC G2	SG160 A G2	SG160 A RC G2
Tilt	*Yes*	*Yes*	*Yes*	*Yes*
Collecting unit	*No*	*No*	*Yes*	*Yes*
Grapple size	*0,16 m^2*	*0,16 m^2*	*0,16 m^2*	*0,16 m^2*
Weight	*190 kg*	*205 kg*	*220 kg*	*235 kg*
Rec. work pressure	*180-230 bar*	*180-230 bar*	*180-230 bar*	*180-230 bar*
Rec. oil flow	*40-80 l/min.*	*40-80 l/min.*	*40-80 l/min.*	*40-80 l/min.*
Rotator attachment	*69/30*	*69/30*	*69/30*	*69/30*
Hydraulics	*2 lines (grapple open/close)*	*2 lines (grapple open/close)*	*2 lines (grapple open/close)*	*2 lines (grapple open/close)*
Control	*Cable 12V or 24V*	*Wireless control*	*Cable 12V or 24V*	*Wireless control*
Biggest cut diameter (16”)	*ø 350 mm*	*ø 350 mm*	*ø 350 mm*	*ø 350 mm*
Can be installed on	*Trucks Tractors Forwarders Excavators*	*Trucks Tractors Forwarders Excavators*	*Trucks Tractors Forwarders Excavators*	*Trucks Tractors Forwarders Excavators*

Measurements SG160 (without collecting unit)

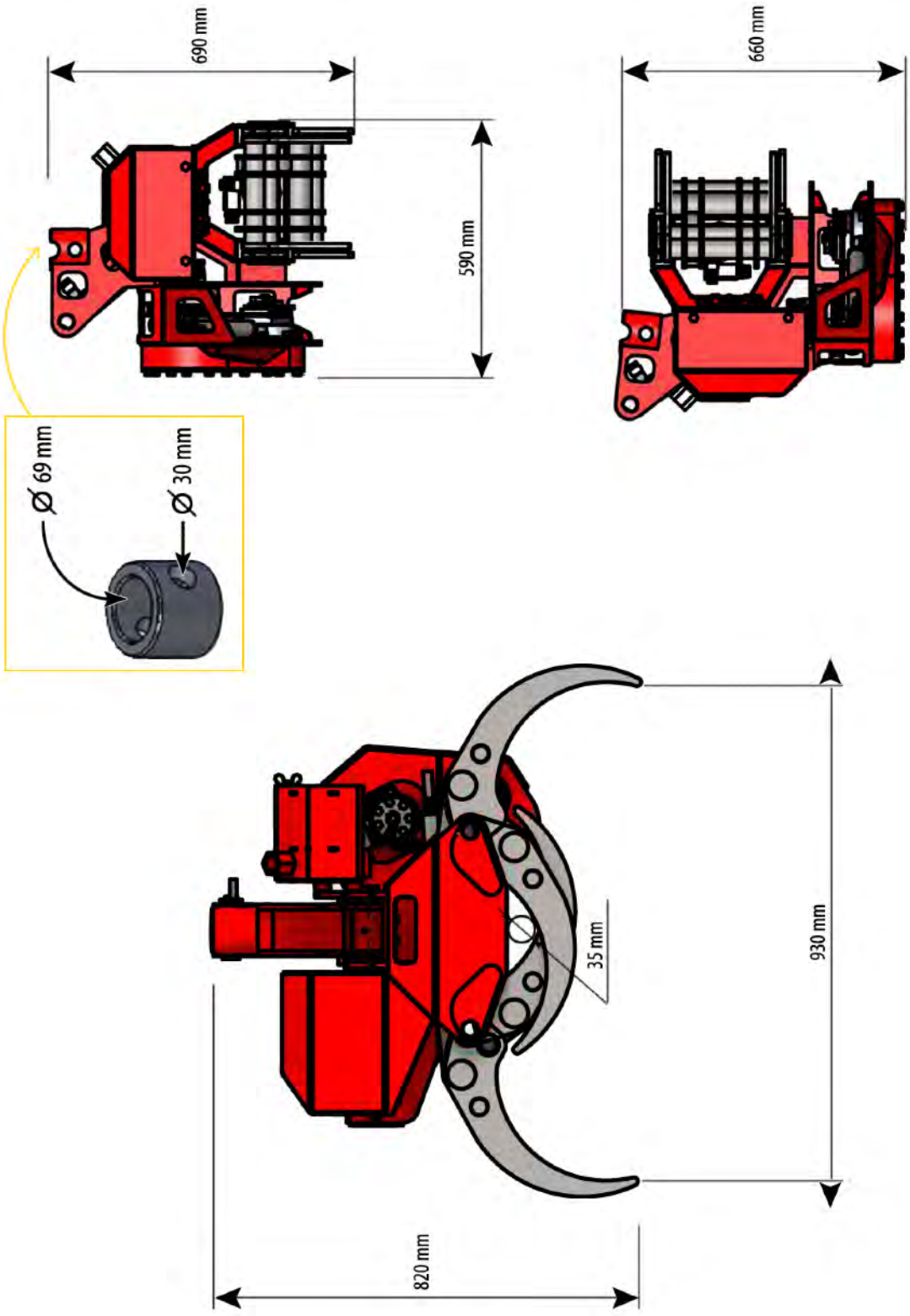

Measurements SG160 A (with collecting unit)

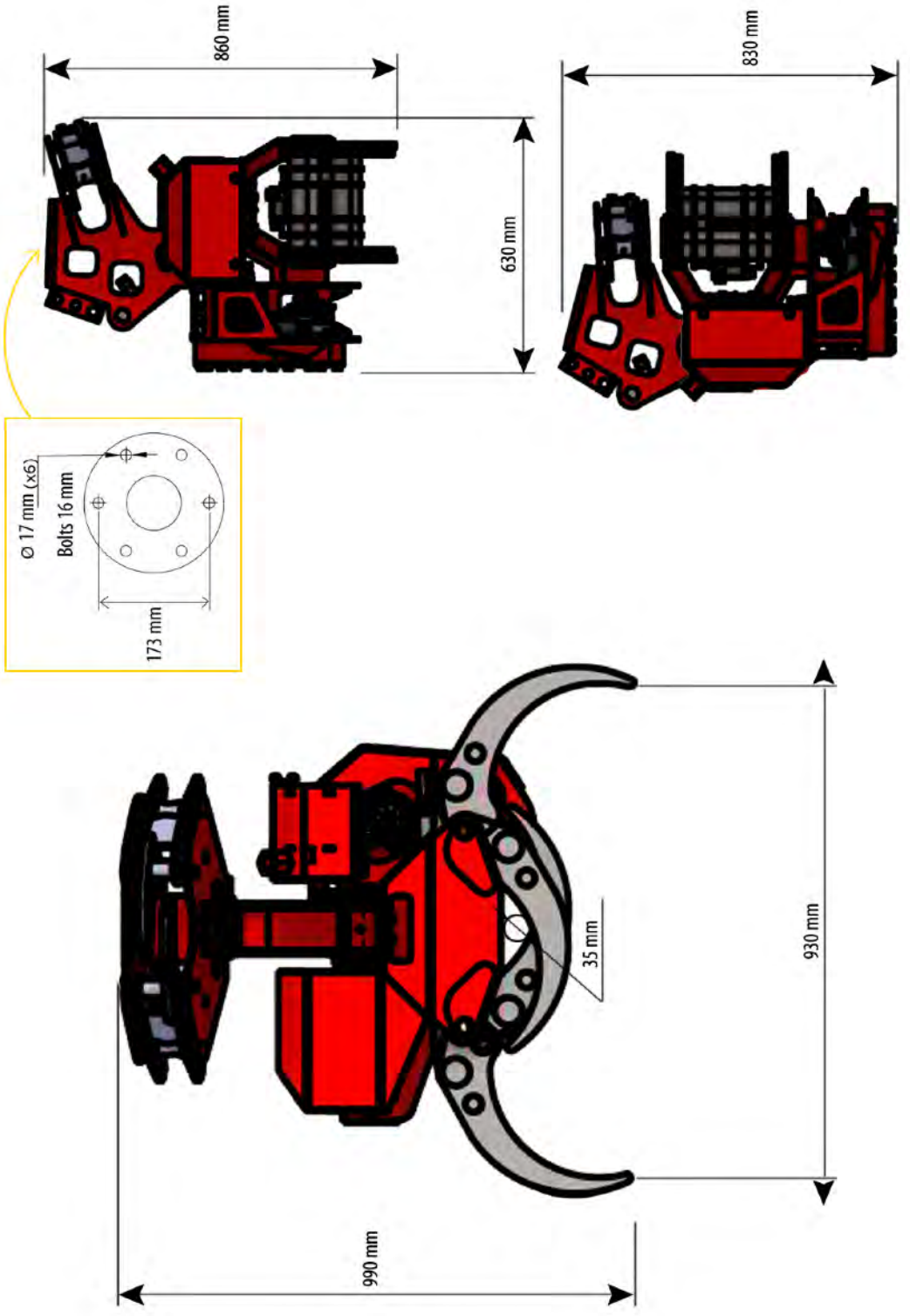

Technical data - wireless control

Transmitter - 3 buttons

Frequency	2,4 GHz, 16 channels
Code combinations	K 4.000.000.000
Buttons	3 x 1
Batteries	3
Batteries	exchangeable
Battery type	LR03 1.5V AAA
Weight	140 g / 0.3 lb
Measurements	65x112x35 mm / 2.6x4.4x1.4 tum
Encapsulation	IP67
Temperature	-20 to +55 °C / -4 to +130 F
On/off-switch	Yes



The picture is for illustrative purposes only, the actual product may differ from this.

Transmitter - separate pushbuttons

Frequency	2,4 GHz, 16 channels
Mod.type	FM-modulation
Radio type	PLL Synthesizer
Buttons	10 x 1
Power supply	12V/24V
Measurements	120x116x50 mm / 4.7x4.6x2 tum
Encapsulation	IP66
Temperature	-20 to +55 °C / -4 to +130 F
On/off-switch	Yes
Function	Customizable, up to 10 button input



The picture is for illustrative purposes only, the actual product may differ from this.

© 2019 Mecanil Oy Ab

Receiver

Frequency	2,4 GHz, 16 kanaler
Relays	5
Duplex	No
Power	12-24V DC
Measurements	120x116x50 mm / 4.7x4.6x2 tum
Encapsulation	IP66
Bus-system	None
Relay function	Momentary, Toggling, Interlocking/ preset
Antenna	1 integrated
Temperature	-20 to +55 °C / -4 to +130 F



The picture is for illustrative purposes only, the actual product may differ from this.

© 2019 Mecanil Oy Ab

Instructions for pairing transmitter to receiver

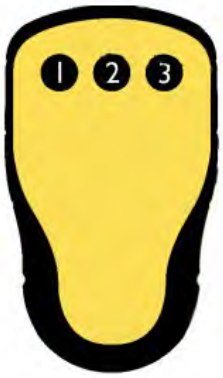

Transmitter

Start the transmitter

1. Start the transmitter by pressing any button.

Register the transmitter to the receiver

1. Press the “Function”-button on the receiver.
   (the upper button “F”).
   Function LED shines red (LED 7).



2. Press the “Select”-button on the receiver.
   (the lower button “S”).
   Alla relay LED`s light up.

3. **Transmitter handheld**
   Press and hold buttons 1 and 2 on the transmitter.
   All relay LED’s light up.
   Keep the buttons pressed.

   Transmitter with separate pushbuttons
   Press and hold blue and yellow buttons on the transmitter.
   All relay LED’s light up.
   Keep the buttons pressed.



4. The relay LED’s blink 3 times.
   Release the buttons.
   The pairing is done.

Erase all transmitter from the receiver

1. Press the “Function”-button on the receiver.
   (the upper button “F”).
   The function LED shines red.



2. Keep the “Select”-button pressed on the receiver.
   (the lower button “S”).
   All relay LED’s light up.

3. All relay LED’s turn off.
   Release the “Select”-button.
   All transmitters are now erased from the memory.

NOTE! If the “Function” LED on the receiver blinks red, one or more transmitters are paired to the receiver.

© 2019 Mecanil Oy Ab

Warranty conditions

- We give 12 months warranty or a maximum of 1000 hours of use for material- and manufacturing faults. However, the warranty period ends 30 months after shipment from the manufacturer.
- The warranty takes effect when the product is delivered and the warranty card is filled out and returned to the factory.
- The warranty applies to manufacturing- and material faults, except hydraulic hoses, connections, seals, knifes or saw -bars and –chains and parts that wear out.
- If the grapple has remote control the warranty for the remote control battery is 6 months.
- The warranty does not apply to normal wear out, wrong usage, wrong assembly or faults caused by deficient service.
- The warranty does not apply if the construction of the product has been changed.
- The warranty does not cover any shipping costs considering the product or spare parts, nor travelling costs for possible repair work.
- The warranty does not cover work costs considering installation and repairs.
- The warranty neither apply to faults that are a result of another fault that has not been attended to.
- The warranty is void if the product has been modified in any way.
- The warranty ceases to apply if the product has been repaired by someone else than the manufacturer or a workshop designated by the manufacturer, or if the hydraulic pressure has been raised over the allowed limit.
- The manufacturer will not cover losses of income because of possible suspension of work.
- The manufacturer will not pay consequential or punitive damages in any case.
- The warranty ceases to apply if the use- and service instructions have not been followed.
- All disputes which can not be resolved amicably between the parties, shall be exclusively decided by the district court of Itä-Uusimaa, Porvoo, Finland. Finnish law shall be applied.
- The reseller/distributor shall always fill out the warranty card at the moment of purchase and return it to the manufacturer. The warranty will be valid from this day.
- Warranty repairs will be done by the service network of the manufacturer. In some cases, an exception can be made if the manufacturer approves of it. For example, in case of simpler repairs the customer can change a specific part himself if approved by the manufacturer.
  In the case of warranty repairs, take pictures of the faulty part, fill out the warranty application and send it to Mecanil Oy Ab with the parts order and pictures. The new parts will be shipped with an invoice.
  Return the faulty parts that You apply for as warranty.
  If the returned part is considered to be flawed due to manufacturing error, the invoice will be credited. In some cases the pictures are sufficient, and returning of the part will not be necessary. If this is the case, the manufacturer will inform of it.
- Only in urgent cases it is allowed to act differently and only in consultation with the manufacturer. If repairs are done by, for example, a non-authorized person or workshop, it has to be agreed in advance.
- The warranty application forms are attached to the manual that is delivered with every product.

© 2019 Mecanil Oy Ab

Declaration of conformity

We,
Mecanil Oy Ab
Valtatie 565
07880 LILJENDAL
FINLAND

hereby declare that

Product: Grapple saw

Model: _____

Serial number: _____

Manufacturer: Mecanil Oy Ab, Valtatie 565, 07880 Liljendal, FINLAND

is manufactured in agreement with the Machine Directive 2006/42/EC and can be used on another product forming a complete machine.

This product is not included in any statement in appendix IV of Machine Directive 2006/42/EC and therefore is not considered as a dangerous machine.

This partly completed machinery must not be put into service until the final machinery into which it is to be incorporated has been declared in conformity with the provisions of the Machine Directive 2006/42/EC, where appropriate.

Liljendal, Finland

_____ _____

Place Date

Manufacturer:
Mecanil Oy Ab



_____

Pamela Nilsson-Nordström
CEO

This page is intentionally left empty.

© 2019 Mecanil Oy Ab

Form - Warranty application

Date _____ / _____ 20 _____

All parts sent from the manufacturer may be invoiced. If a part is applied for as warranty the faulty part shall be returned to the manufacturer for inspection. If the application is approved the invoice will be credited.

Dealer
Owner

Product and model		Serial No.
Date of delivery	Work hours	Date of failure
Installed on (machine)	Other notes	

Description of the failure	Repairs
Service hours	Service costs

Failed parts			
Art. nr.	Description	Qty	Price
Other			
Service done by			

Notes for accepting warranty

Accepted		
	Qty	Comments
Work hours		
Parts		
Total to be credited		