Mecanil Products

MECANIL SG160

Spare parts

GENERATION 2

All rights reserved. Specifications are subject to alteration.
Mecanil Oy Ab can not be held responsible for possible type errors or inconsistencies in this spare parts list.

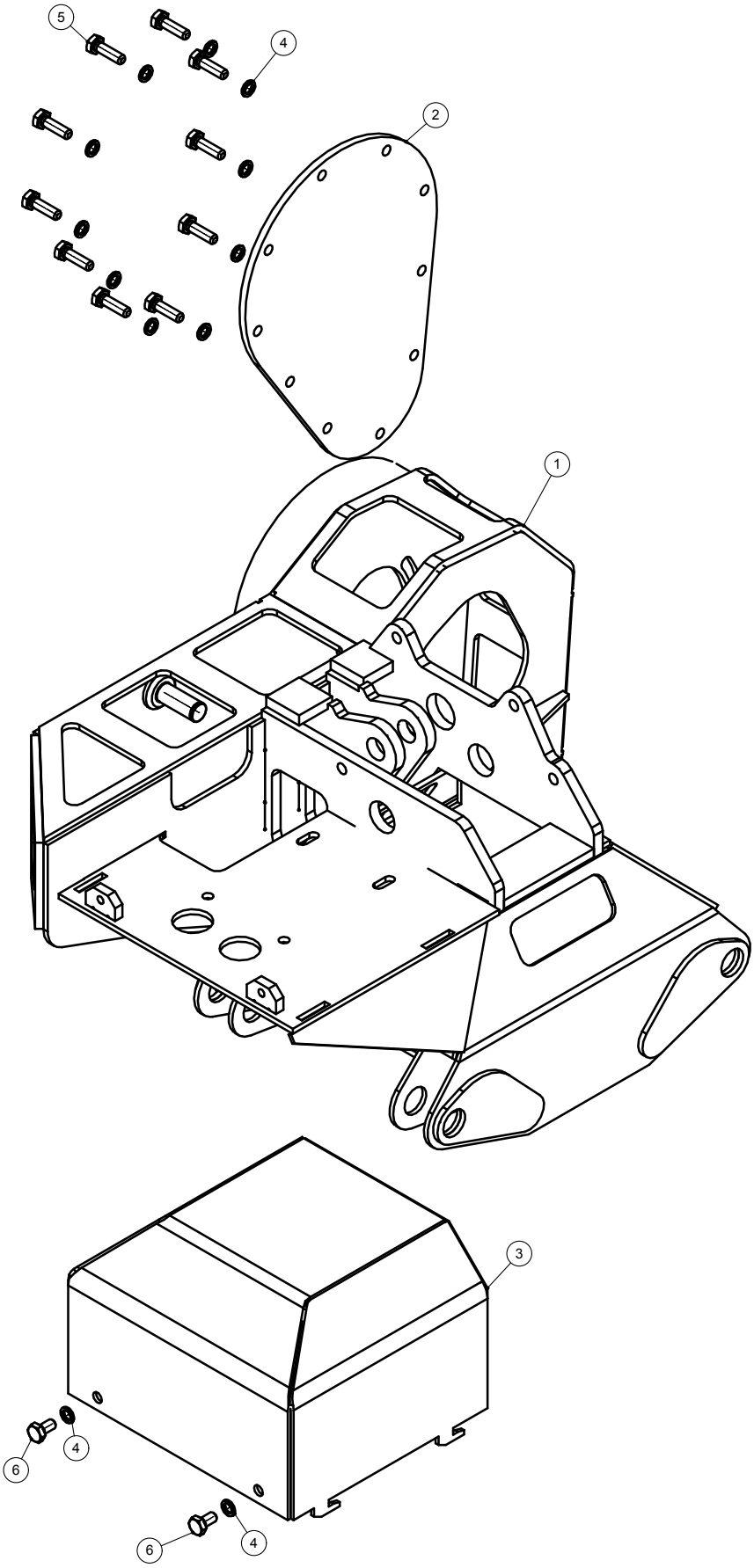

© 2019-1 Mecanil Oy Ab

No.	Art. No.	Part	Description	Quantity (pcs.)
1	201-220352	Grapple frame		1
2	201-220503	Lid drive belt		1
3	201-220139	Lid valve set		1
4	510-220234	Lock washer	Lock M10	12
5	510-220260	Bolt	M10x35 8.8	10
6	510-220259	Bolt	M10x20 8.8ZN	2

This page is intentionally left empty.

© 2019-1 Mecanil Oy Ab

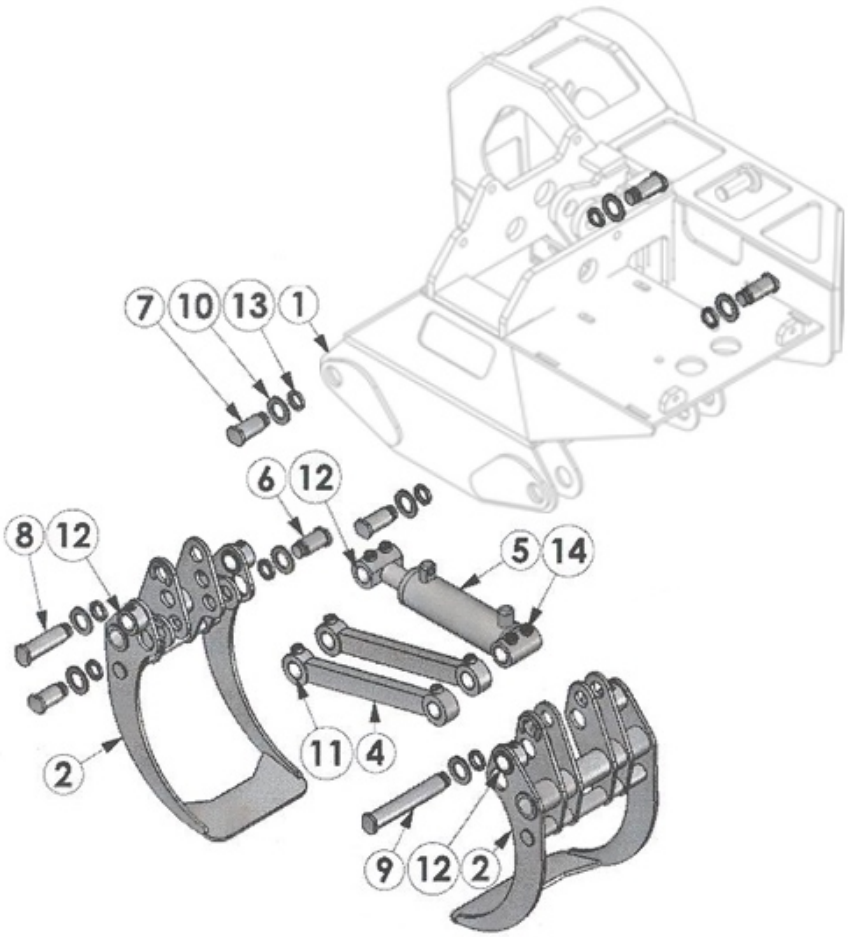

No.	Art. No.	Part	Description	Quantity (pcs.)
1	201-220352	Grapple frame		1
2	201-220111	Log grapple claws (pair)	Claw alt. 1	1
2	201-220112	Energy grapple claws, open ended (pair)	Claw alt. 2	1
4	201-220144	Guide bar		2
5	401-220129	Grapple cylinder		1
6	201-220031	Shaft, guide bar		2
7	201-220030	Shaft, grapple claw		4
8	201-220032	Shaft, grapple cylinder shaft		1
9	201-220033	Shaft, grapple cylinder, guide bar		1
10				
11				
12				
13				
14	510-220230	Grease fitting	M10x1 straight	12

© 2019-1 Mecanil Oy Ab

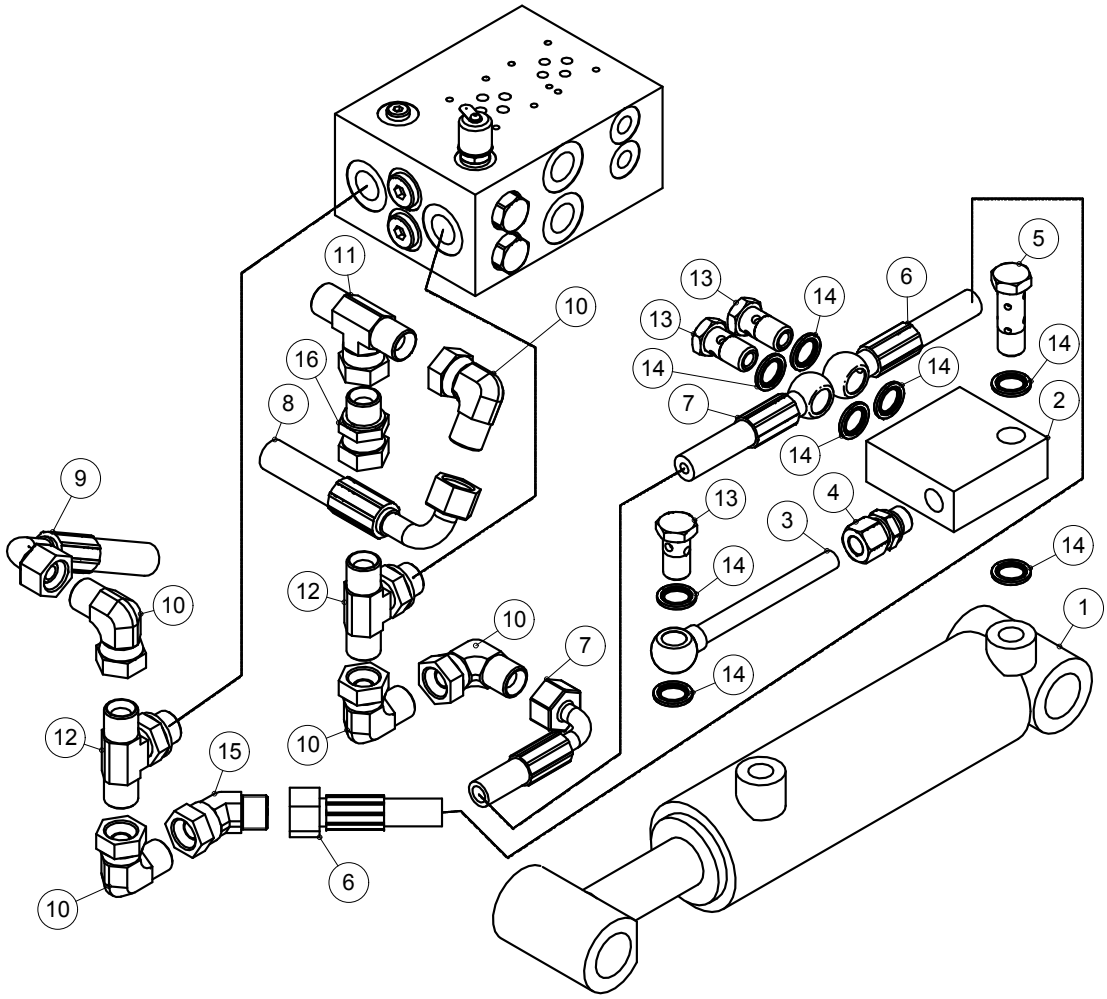

1
2
3
4
5
6
7
8
9
10
11
12
13
14
15
16

No.	Art. No.	Part	Description	Quantity (pcs.)
1	401-220132	Grapple cylinder		1
2	400-220356	Load holding valve		1
3	400-220357	Pipe for holding valve		1
4	400-220204	Pipe fitting	3/8”	1
5		Banjo bolt		1
6	400-220963	Hose	Block (A) - Grapple close	1
7	400-220964	Hose	Block (B) - Grapple open	1
8	400-220966	Hose	B - Rotator	1
9	400-220965	Hose	A - Rotator	1
10	400-220158	Angle fitting 90 deg.	R1/2”	5
11	400-220176	T-fitting	1/2”	1
12	400-220151	T-fitting (adjustable)	1/2”	2
13	400-220184	Banjo bolt	3/8”	3
14	400-220178	Self-centering metal seal	3/8”	7
15	400-220161	Angle fitting 45 deg.		1
16	400-220198	Fitting		1

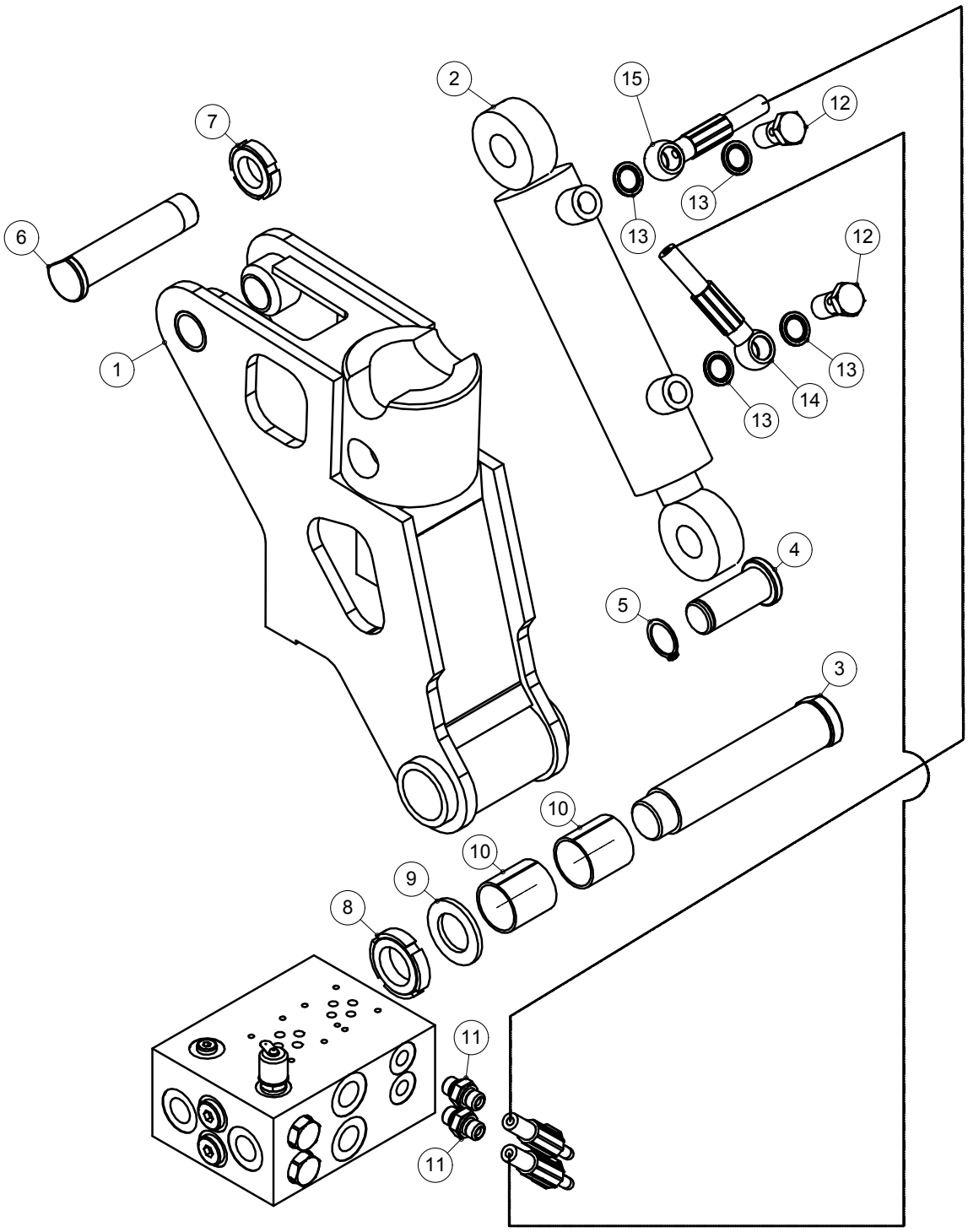
2
15
12
7
13
6
13
12
1
13
14
13
4
5
3
10
10
9
8
11
11

No.	Art. No.	Part	Description	Quantity (pcs.)
1	201-220348	Tilt frame		1
2	401-220134	Tilt cylinder		1
3	201-220094	Shaft for tilt unit		1
4	201-220096	Pin for tilt cylinder (shaft)		1
5	510*220349	Lock ring		1
6	201-220095	Pin for tilt cylinder (pipe)		1
7	510-220270	Nut KM5	KM5	1
8	510-220271	Nut KM6	KM6	1
9	510-220240	Washer M36/37		1
10	404-220048	Bushing	35x39x40	2
11	400-220169	Double fitting	BSP	2
12	400-220184	Banjo bolt (BSP)	3/8”	2
13	400-220178	Selfcentering seal	3/8”	2
14	400-220958	Hydraulic hose	Block - Tilt cylinder (shaft)	1
15	400-220959	Hydraulic hose	Block - Tilt cylinder (pipe)	1

© 2019-1 Mecanil Oy Ab

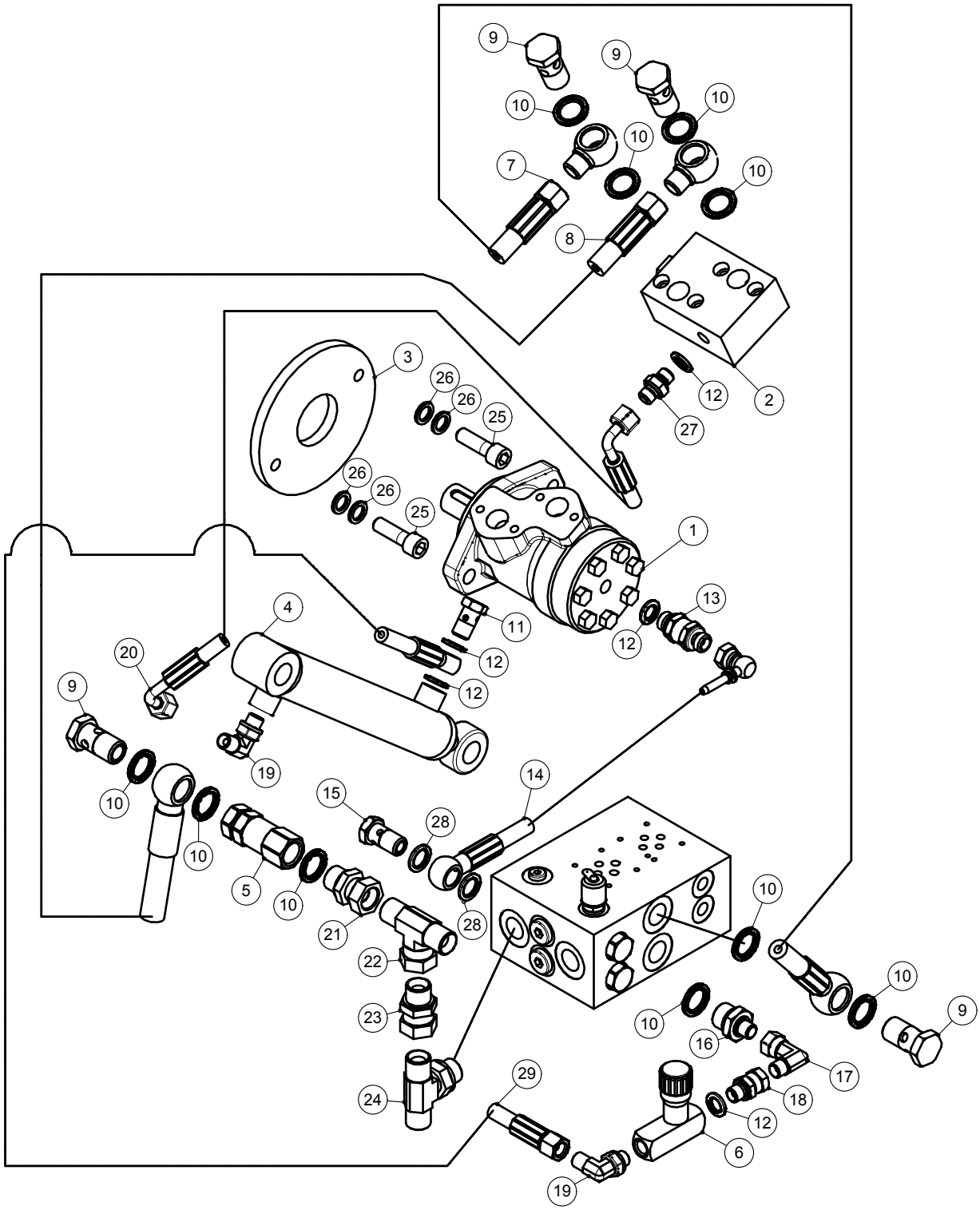
9
9
10
10
10
10
7
8
2
12
27
3
26
26
25
26
26
25
1
13
12
11
4
12
12
20
9
19
10
10
15
14
28
5
10
21
28
22
23
24
10
10
10
9
16
17
18
12
6
29
19

No.	Art. No.	Part	Description	Quantity (pcs.)
1	401-220081	Saw motor (32cc)		1
2	401-220086	Saw motor block		1
3	401-220014	PLate		1
4	401-220135	Saw cylinder		1
5	400-220218	Check valve	1/2”	1
6	400-220221	Adjustable check valve		1
7	400-220955	Hydraulic hose	Block B1 - saw motor block	1
8	400-220956	Hydraulic hose	Saw motor block - check valve	1
9	400-220185	Banjo bolt	1/2”	4
10	400-220179	Self-centering metal seal	1/2”	10
11	400-220183	Bajno bolt	3/8”	1
12	400-220177	Self-centering metal seal	1/4”	3
13	400-220217	Check valve	1/4”	1
14	400-220953	FittingHydraulic hose	Saw motor spill - block	1
15	400-220184	BSP banjo bolt	3/8”	1
16	400-220166	Double fitting	BSP	1
17	400-220156	Angle fitting 90deg.	R1/4”	1
18	400-220196	Double fitting	BSP 1/4”	1
19	400-220154	Adjustable angle fitting 90deg.	1/4”	2
20	400-220954	Non-return valve		1
21	400-220198	Double fitting	1/2”	1
22	400-220176	T-fitting	1/2”	1
23	400-220198	Double fitting	1/2”	1
24	400-220151	Adjustable T-fitting	1/2”	1
25	510-220255	Bolt 12x40	M12x40 12.9	2
26	510-220235	Washer	Lock M12	4
27	400-220169	Double fitting	BSP 1/4”	1
28	400-220178	Self-centering metal seal	3/8”	1
29	400-220957	Hydraulic hose	Adj. valve - saw cyl. shaft	1

© 2019-1 Mecanil Oy Ab

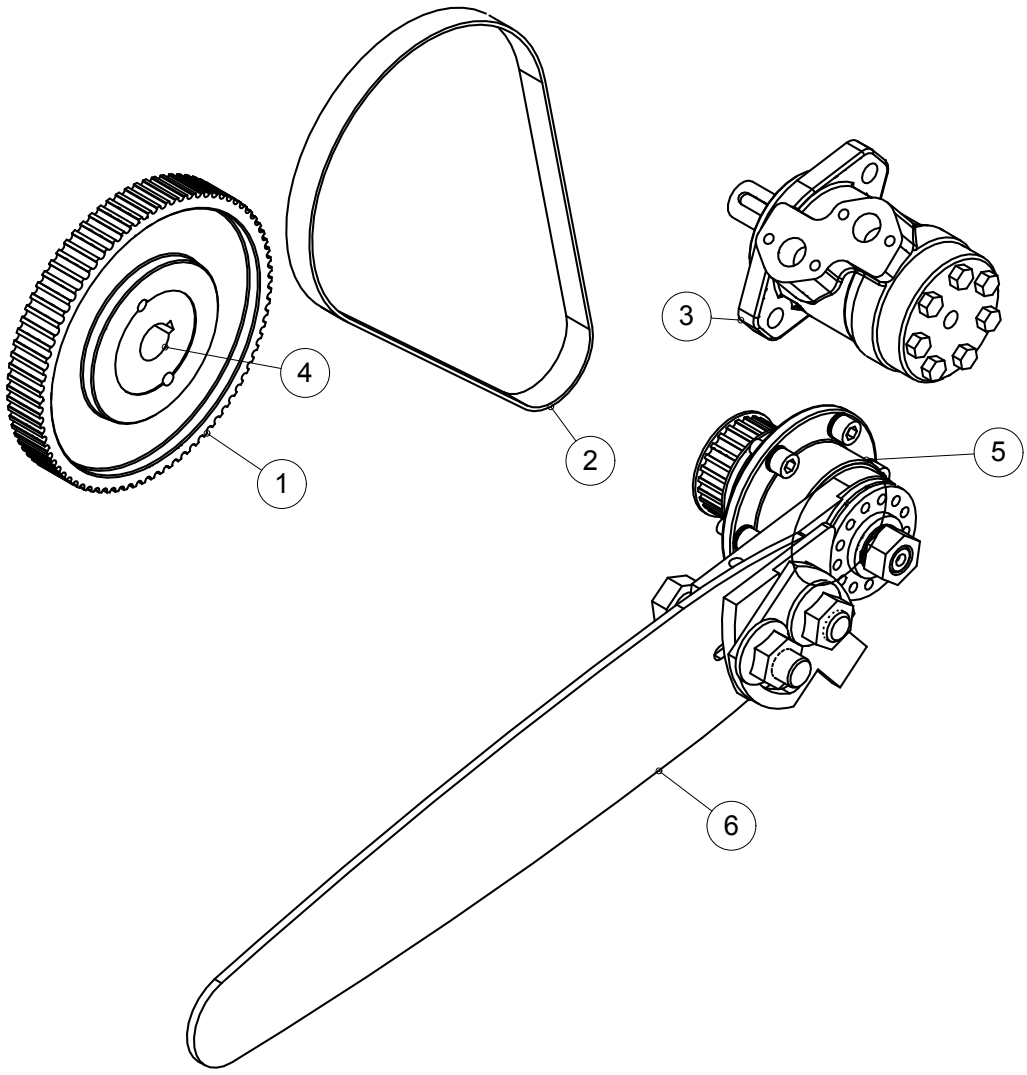

© 2019-1 Mecanil Oy Ab

No.	Art. No.	Part	Description	Quantity (pcs.)
1	406-220053	Belt wheel large		1
2	406-220050	Drive belt		1
3	401-220081	Saw motor 32cc		1
4	406-220054	Belt wheel centre		1
5	201-220141K	Saw bar attachment complete		1
6	410-220391	Mecanil Pro Saw bar 16”	48 cm	1

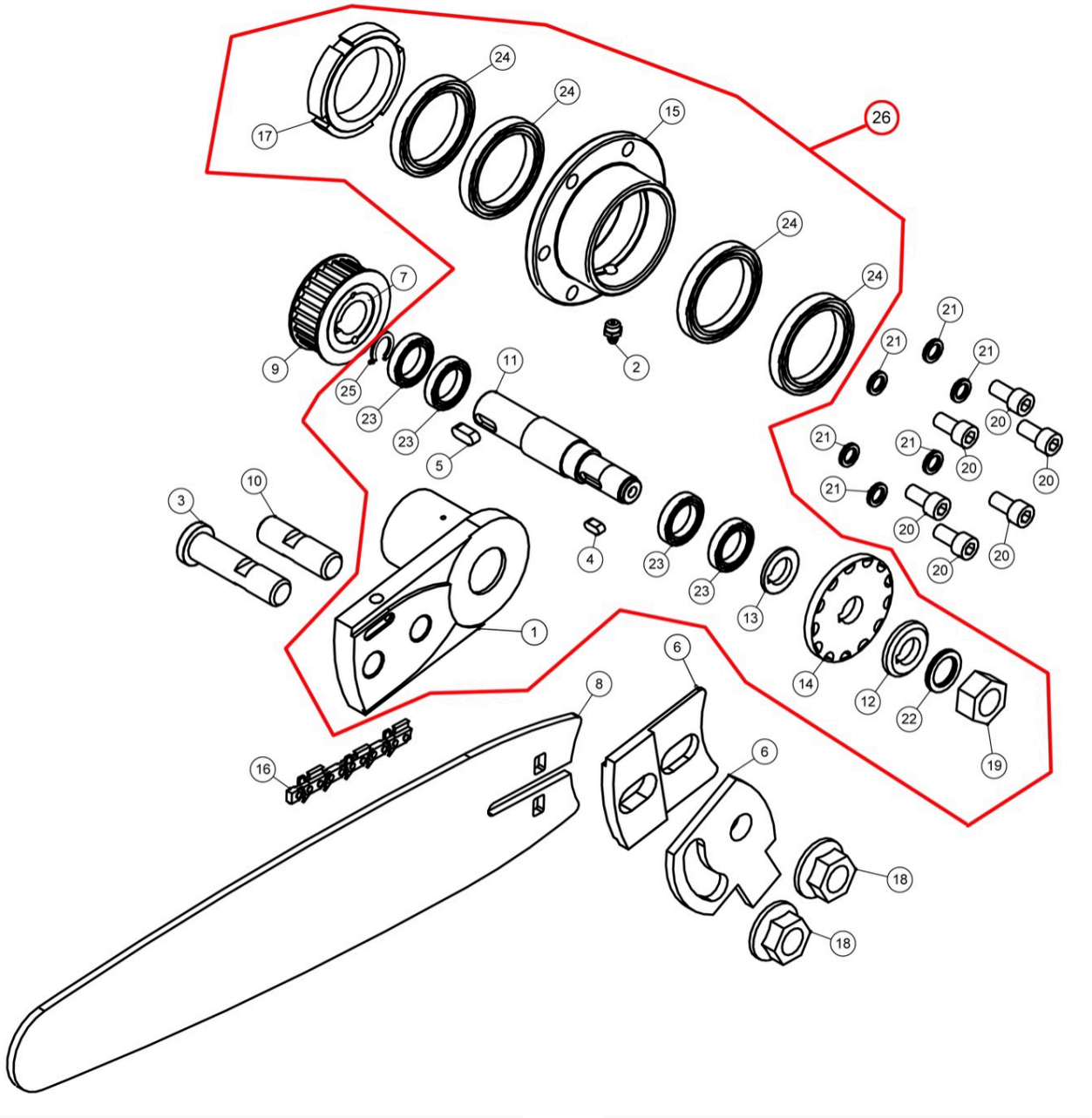
26
24
24
15
17
24
24
7
9
25
23
23
11
5
2
21
21
21
21
21
21
20
20
20
20
20
20
20
10
3
4
23
23
13
1
14
12
22
19
6
8
16
6
18
18

No.	Art. No.	Part	Description	Quantity (pcs.)
1	201-220141	Saw bar attachment		1
2	510-220231	Grease fitting	R1/8”	1
3	201-220027	Saw bar bolt cylinder		1
4	510-220082	Wedge	8x7x15	1
5	510-220012	Wedge	8x7x20	1
6	201-220071	Chain tensioner complete (set)		1
7	406-220056	Belt wheel small centre		1
8	410-220391	Mecanil Pro Saw bar 16”	48 cm	1
9	406-220055	Belt wheel small		1
10	201-220028	Saw bar bolt		1
11	201-220024	Saw shaft		1
12	201-220007	Saw washer		1
13	201-220008	Distance washer		1
14	410-220063	Drive wheel		1
15	201-220009	Saw bar part		1
16	410-220022	Saw chain (16”)		1
17	510-220276	Nut KM11	KM11 M55x2	1
18	510-220064	Nut	M20	2
19	510-220249	Nut	M20x1,5	1
20	510-220252	Bolt	M10x25	6
21	510-220234	Washer	M10	6
22	510-220238	Washer	Lock M20	1
23	404-220072	Bearing small		4
24	404-220073	Bearing large		4
25	510-220067	Locking washer	37x1,5	1
26	201-220141K	Saw bar attachment complete		1

© 2019-1 Mecanil Oy Ab

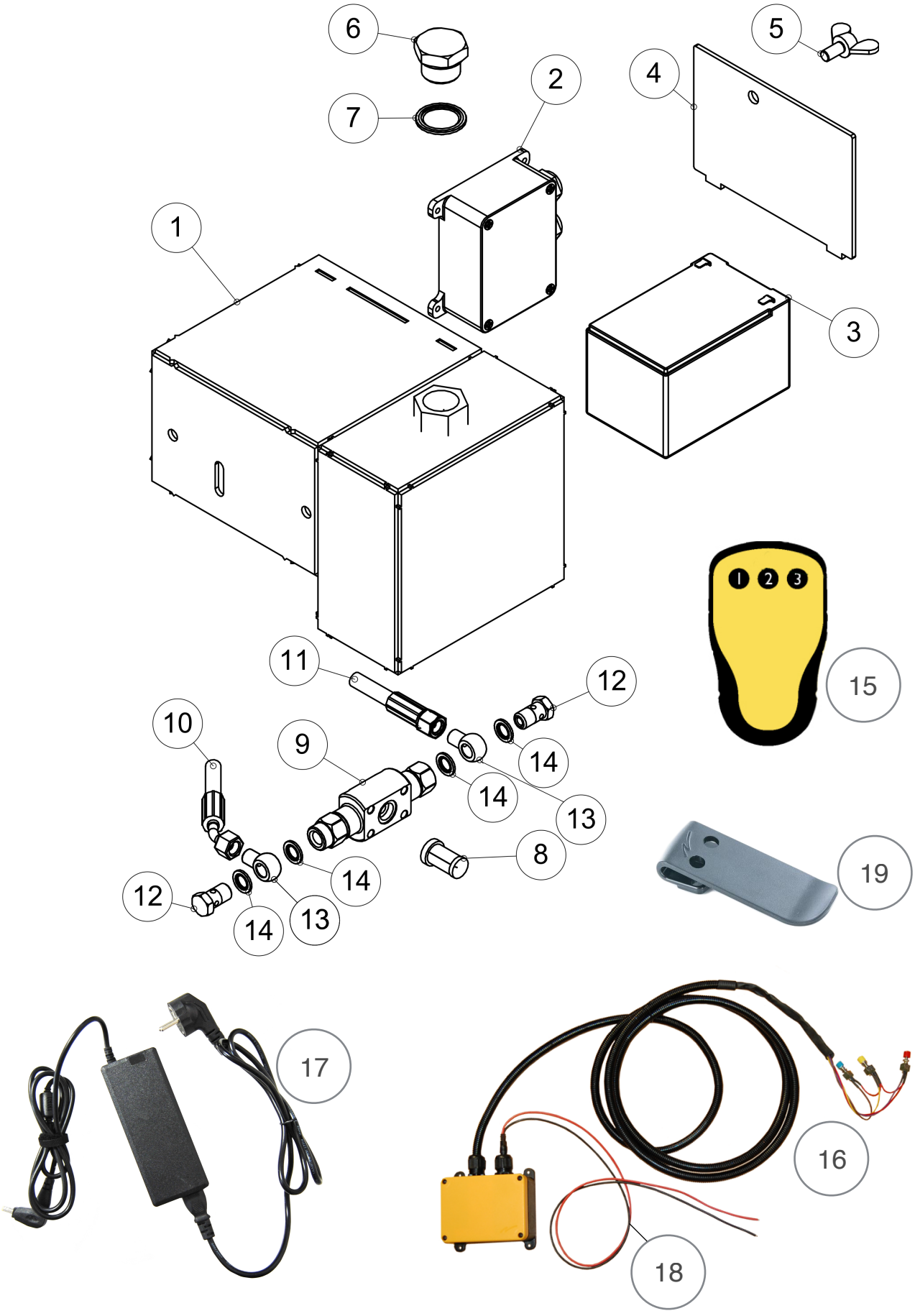

© 2019-1 Mecanil Oy Ab

No.	Art. No.	Part	Description	Quantity (pcs.)
1	201-220366	RC-box		1
2	430-220116	Radio control receiver		1
3	432-220127	Battery 12V LiFePO4 (12Ah, 144Wh)		1
4	201-220367	Lid for RC-box		1
5	510-220278	Wing Bolt	M10x20	1
6	400-220194	Chain oil tank cap		1
7	400-220182	Self centering metal seal	1”	1
8	400-220282	Debris filter		1
9	400-220223	Pump for chain oil		1
10	400-220976	Hydraulic hose	Oil pump - check valve, (400-220961 for models with serial nr up to SGS052)	1
11	400-220975	Hydraulic hose	Oil pump - saw motor valve (400-220960 for models with serial nr up to SGS052)	1
12	400-220183	Banjo bolt	1/4”	2
13	400-220173	Banjo fitting	1/4”	2
14	400-220177	Self centering metal seal	1/4”	4
15	430-220113	Remote control	Handheld	1
16	430-220115	Alt. Remote control sender	To be installed in cabin	1
17	430-220128	Battery charger	Only for LifePo4 batteries	1
18	431-DC5525M	Power cable		1
19	430-220118	Clip for remote control handheld sender		1

© 2019-1 Mecanil Oy Ab